interKing INTERKING ENTERPRISES LTD.

Distributed Paging Intercom System

Catalogue

I. Industrial Communication Systems ……1

II. System Diagram

(1) Standard Multi-party Intercom Paging System……2

(2) Intelligent Multi-party Intercom Paging System……3

III. Ex Regulations……4

IV. Products

(1) Standard System:

1. Weather-proof Handset Station

1.1 Wall Mount Handset Station

Indoor : K35AG0 ……7

Outdoor : K35A40……9

Outdoor : K35A60……11

1.2 Desktop Handset Station : K35AD0 ……13

1.3 Desktop Handset Station with Merge / Isolate Control : K35ADM……15

1.4 Flush Mount Handset Station : K35AF0……17

1.5 Side Mount Handset Station : K35AS0……19

1.6 Portable Handset Station : K35AP0……21

1.7 Wall Mount Amplifier Station

Indoor : K3AAG0 ……23

Outdoor : K3AA40……25

Outdoor : K3AA60……27

2. Explosion-proof Handset Station (Zone 2)

2.1 Wall Mount Handset Station

Indoor : K25AG0 ……29

Outdoor : K25A40……31

Outdoor : K25A60……33

2.2 Desktop Handset Station : K25AD0……35

2.3 Wall Mount Amplifier Station

Indoor : K2AAG0……37

Outdoor : K2AA40……39

Outdoor : K2AA60……41

3. Explosion-proof Handset Station (Zone 1)

3.1 Wall Mount Handset Station

Indoor : K15AG0……43

Outdoor : K15A40 45
3.2 Wall Mount Amplifier Station
Indoor : K1AAG0 47
Outdoor : K1AA40 49
(2) Intelligent System:
1. Weather-proof Handset Station
1.1 Wall Mount Handset Station
Indoor : K35DG0 51
Outdoor : K35D40 53
Outdoor : K35D60 55
1.2 Desktop Handset Station : K35DD0 57
1.3 Desktop Handset Station with Merge / Isolate Control: K35DDM 59
1.4 Flush Mount Handset Station : K35DF0 61
1.5 Side Mount Handset Station : K35DS0 63
1.6 Portable Handset Station : K35DP0 65
1.7 Wall Mount Amplifier Station
Indoor : K3ADG0 67
Outdoor : K3AD40 69
Outdoor : K3AD60 71
2. Explosion-proof Handset Station (Zone 2)
2.1 Wall Mount Handset Station
Indoor : K25DG0 73
Outdoor : K25D40 75
Outdoor : K25D60 77
2.2 Desktop Handset Station : K25DD0 79
2.3 Wall Mount Amplifier Station
Indoor : K2ADG0 81
Outdoor : K2AD40 83
Outdoor : K2AD60 85
3. Explosion-proof Handset Station (Zone 1)
3.1 Wall Mount Handset Station
Indoor : K15DG0 87
Outdoor : K15D40 89
3.2 Wall Mount Amplifier Station
Indoor : K1ADG0 91
Outdoor : K1AD40 93

(3) Junction Box
1. Weather-proof Wall Mount Junction Box : JB034 ……95
2. Weather-proof Wall Mount Junction Box (ABS) : JB036 ……97
3. Explosion-proof Wall Mount Junction Box : JB024-P ……99
4. Explosion-proof Wall Mount Junction Box : JB024 ……101
5. Explosion-proof Wall Mount Junction Box (ABS) : JB026 ……103
6. Explosion-proof Wall Mount Junction Box : JB014 ……105
(4) Speaker
1. Speaker with Driver ……107
1.1 8" ABS Wall Mount Speaker with Volume Control : SB861
1.2 8" Metal Flush Mount Speaker : SF861
1.3 8" Metal Wall Mount Speaker with Volume Control : SB862
1.4 Grey Wide Angle ABS Horn Speaker : TH30P
1.5 White Wide Angle ABS Horn Speaker : TS15R
1.6 8" ABS Wall Mount Horn Speaker : TQ15R
1.7 10" Aluminum Horn Speaker : TU-10F
1.8 15" Aluminum Horn Speaker : TU15F
2. Outdoor Speaker Driver ……109
2.1 Explosion-proof Zone 2 : DR230
2.2 Explosion-proof Zone 2 (ABS) : DR260
2.3 Explosion-proof Zone 1 : DR130
3. Mounting Accessory ……109
3.1 Speaker Mounting Assembly : SMA41
4. Speaker Horn ……111
4.1 15" Speaker Horn : HS015
4.2 18" Speaker Horn : HS018
4.3 20" Speaker Horn : HS020
4.4 Wide Angle Speaker Horn : WH001
5. Weather-proof GRP Speaker ……113
5.1 Self-amplified Speaker : TW83A / TW83A-A
5.2 Speaker with Driver : TW830
5.3 High Voltage Speaker : TW83T
6. Explosion-proof GRP Speaker ……115
6.1 Self-amplified Speaker : TW81A / TW81A-A
6.2 Speaker with Driver : TW810
6.3 High Voltage Speaker : TW81T
(5) Acoustic Booth ……117
1. Metal Acoustic Booth : EN2016
2. ABS Acoustic Booth : ENF03

Catalogue

index

(6) Interface ……118
1. Merge / Isolate Controller : MI007
2. T/D Control Panel : TD007
3. Audio Interface : AD101
4. Telephone Interface : TI901
5. Alarm Generator : TS903
6. Radio Interface : RT101
7. Signal Repeater : CR101
8. Hotline Interface Detector : HD107
9. Line Balance : LB201 / LB301
(7) Interface for Rack-mount Accessory ……120
1. 19" Standard Cabinet and Accessory : SCB019
2. Touch Screen Computer Control System (With Software) : ICU101
3. Audio Interface : AD101-R
4. Telephone Interface : TI901-R
5. Alarm Interface : TS903-R
6. Radio Interface : RT101-R
7. Signal Repeater : CR101-R
(8) Cable ……122
1. 16C System Cable : SC016
2. 2C Speaker Cable : SC002
3. 19C System Cable : SC019
V. Product List
(1) Standard Product List ……124
(2) Intelligent Product List ……125

Industrial Communication Systems

Interking Enterprises Ltd. is specialized in design and manufacture of Industrial Communication Systems. The manufacturing processes of our products are in compliance with the standards of ISO9001:2015. The majority of products are accredited by UL, IECEx, ATEX, CNS and CQST, ABS and CR.

The Systems have a distributed structure which allows maximum flexibility for many applications and have different series which are suitable for indoor, outdoor, safe, and hazardous areas. Handset stations have integral amplifiers for speaker drivers. System's wiring is simple, only requiring 2 power lines and leads for each page or party channel. All handset stations are connected in parallel and system expansion is easily done from the nearest handset station or junction box. Systems can be configured as standard or Intelligent.

Applications

Power Plants
Oil, Gas and Petrochemical Plants
Refineries
Sewage Treatment Plants
Steel Rolling Mills
Paper & Textile Mills
Mining & Metallurgy
Coal-dressing Plants
Coking Plants
Incinerators
Light Rail, Bus and Subway Systems

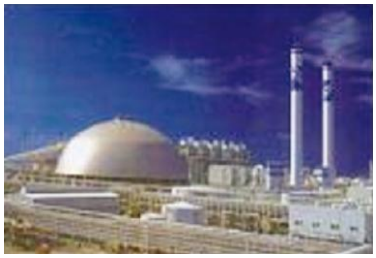

Standard System Diagram

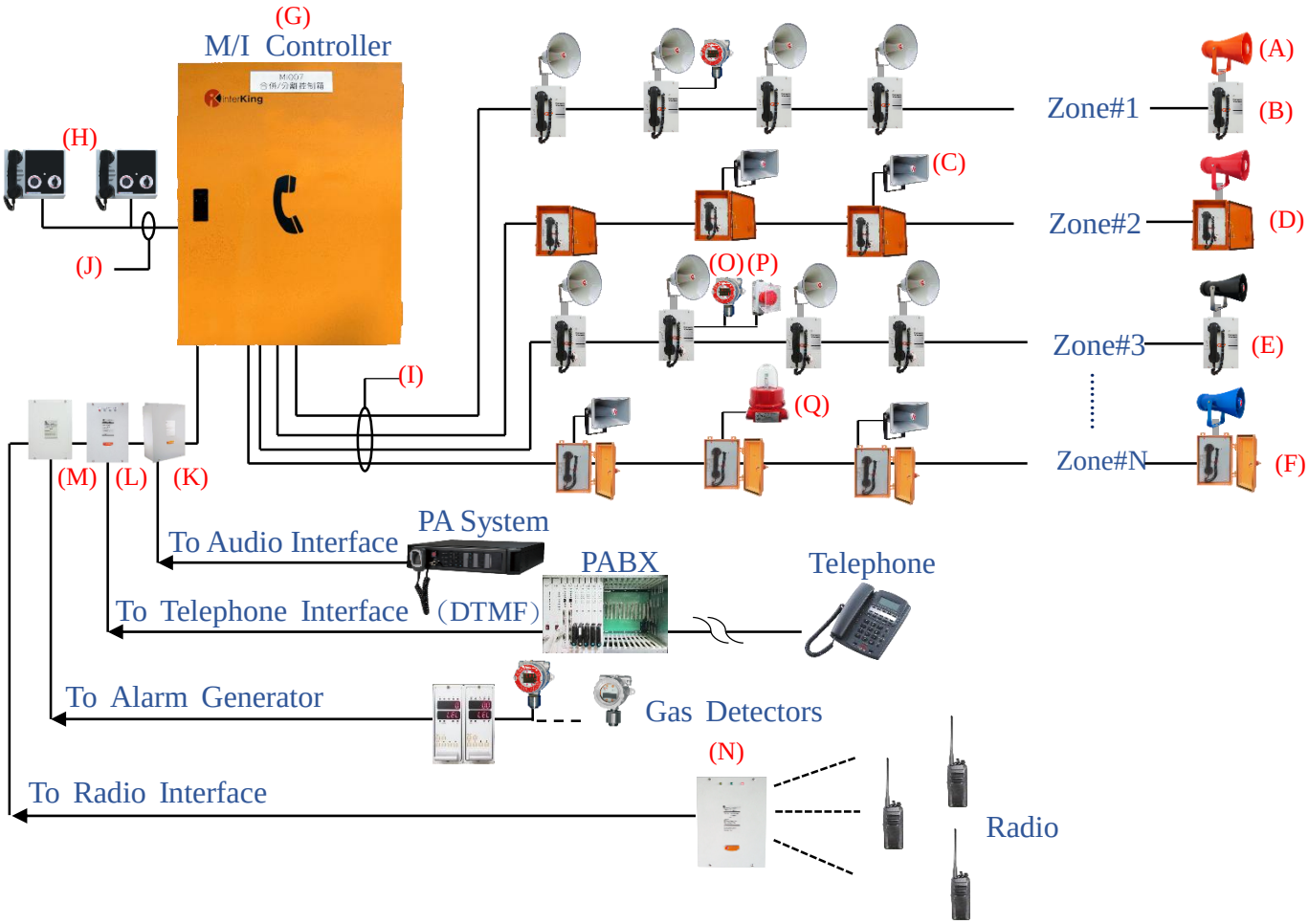

Item	Model	Description
A	TW810	Explosion-proof GRP Speaker
B	K25AG0	Indoor Wall Mount Handset Station (Ex)
C	DR230 + WH001	(Ex)Outdoor Speaker Driver & Speaker Horn
D	K35A40	Outdoor Wall Mount Handset Station
E	K15AG0	Indoor Wall Mount Handset Station (Ex)
F	K35A60	Outdoor Wall Mount Handset Station (ABS)
G	MI007	Merge / Isolate Controller
H	K35AD0	Industrial Desktop Handset Station
I	SC016	16C PVC System Cable
J	SC016	16C Main Control Station Cable
K	AD101	Audio Interface
L	TI901	Telephone Interface
M	TS903	Alarm Generator
N	RT101	Radio Interface
O	MTI	Combustible Gas Detector
P	KFE1L0	Explosion-proof Control Station (Single Unit)
Q	KWF1DA	Explosion-proof Warning Light

Intelligent System Diagram

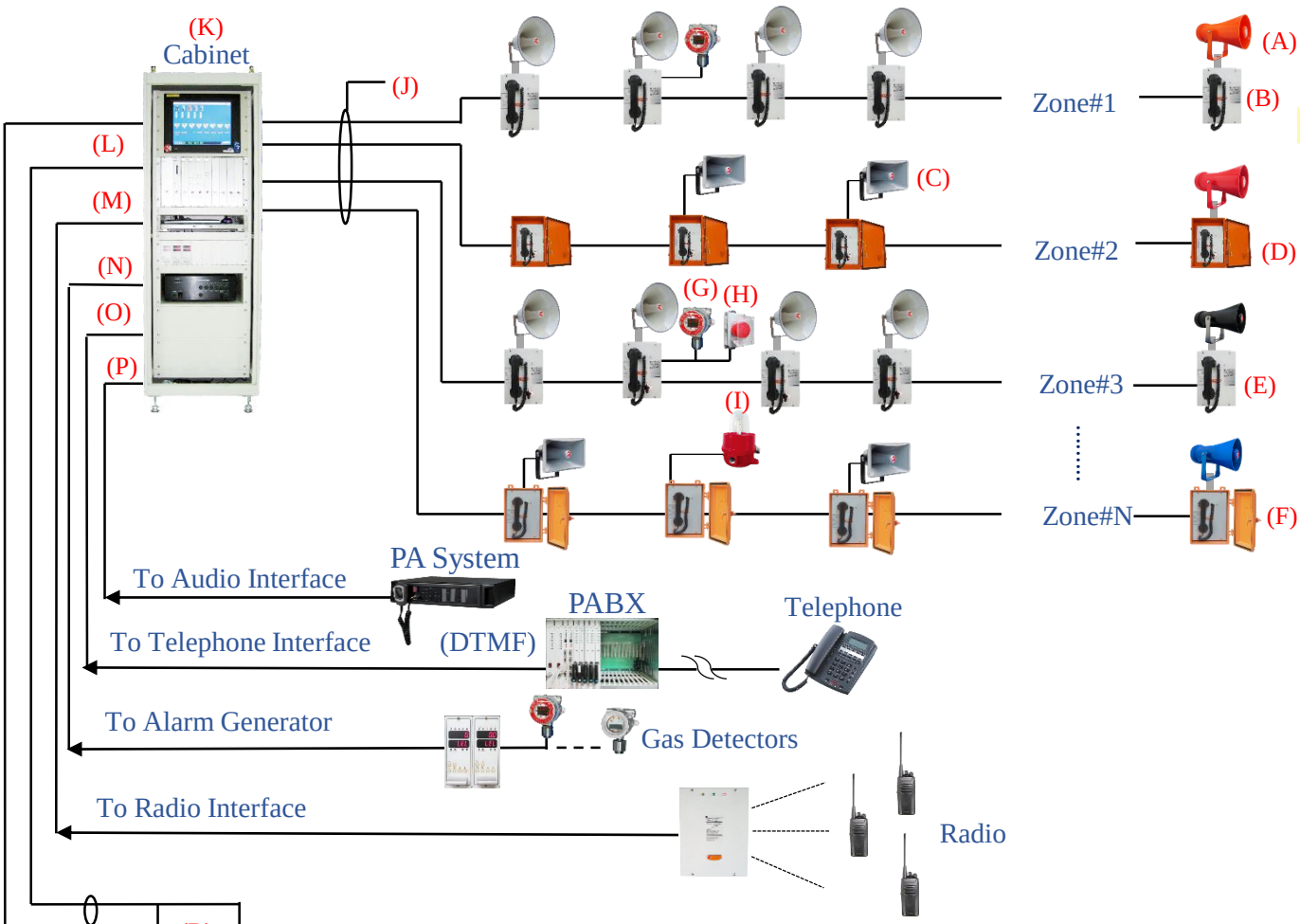

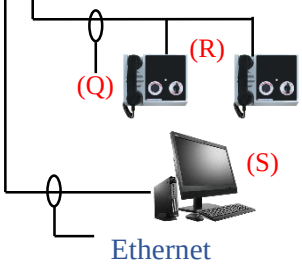

Item	Model	Description
A	TW810	Explosion-proof GRP Speaker
B	K25DG0	Intelligent Indoor Wall Mount Handset Station (Ex)
C	DR230 + WH001	(Ex)Outdoor Speaker Driver & Speaker Horn
D	K35D40	Intelligent Outdoor Wall Mount Handset Station
E	K15DG0	Intelligent Indoor Wall Mount Handset Station (Ex)
F	K35D60	Intelligent Outdoor Wall Mount Handset Station(ABS)
G	MTI	Combustible Gas Detector
H	KFE1L0	Explosion-proof Control Station (Single Unit)
I	KWF1DA	Explosion-proof Warning Light
J	SC019	19C PVC System Cable
K	SCB019	19" System Cabinet
L	ICU101	Intelligent Touch Screen Computer Control System (With software)
M	RT101-R	Radio Interface
N	TS903-R	Alarm Interface
O	TI901-R	Telephone Interface
P	AD101-R	Audio Interface
Q	SC019	19C PVC System Cable
R	K35DD0	Intelligent Desktop Handset Station
S	WKS101	Computer Workstation (with software)

Ex Regulations

Fire Triangle

Flammable Materials:
Gas, vapor, liquid,
Dust
Fiber, flying

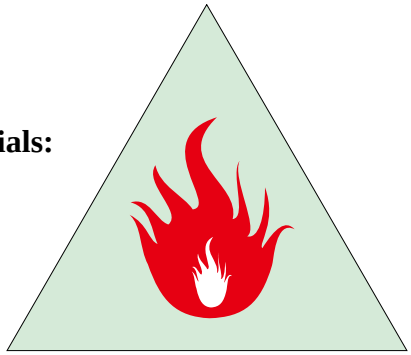

Comburent:
Oxygen

Ignition Sources:
Spark, heat

Hazardous Area Definition:

Places where fire or explosion hazards may exist due to flammable materials(gases, vapors, liquids, dusts, fibers or flyings). When its concentration reaches a certain amount, once an ignition source exists, it will cause a fire explosion.

Electrical Equipment Protection Types:

CNS/GB/IEC/ATEX			UL / CSA	
Protection Type	**Ex Code**	**Zone**	**Division**	**Zone**
Flameproof Enclosure	d	1	1	1
Increased Safety	e	1, 2	2	2
Intrinsic Safety	ia	0, 1, 2	1	1
Intrinsic Safety	ib	1, 2	1	1
Non-incendive	nC	2	2	2
Non-sparking	nA	2	2	2

Ex Regulations

Markings:

NEC: UL, CSA, FM

Class I, Division 2, Groups A, B, C and D

Class II, Division 2, Groups F and G

Class III, Division 2

Type 4X T6 or Type 12 T6

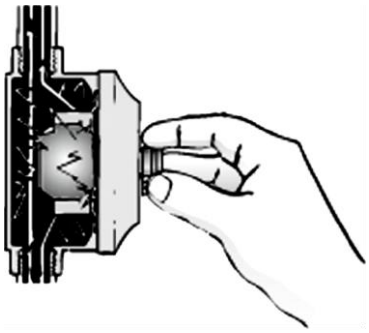

IEC: IEC 60079

Ex db ib IIB+H_2 T6 Gb

Ex ib tb IIIC T80°C Db

ATEX: EN 60079

Ex II 2 GD

Ex db ib IIB+H_2 T6 Gb

Ex ib tb IIIC T80°C Db

Group I: Electrical equipment for mining.

Group II: Electrical equipment for surface industries.

China: GB3836

Ex d IIC T6 Gb, Ex tD A21 IP66 T80°C

Taiwan: CNS 3376

Ex nC IIC T6 Gc

Ex tb IIIC T85°C Db

NEC Hazardous Location Classifications:

Class I: Areas where flammable gases, vapors or liquids are present and are divided into groups A, B, C and D according to the explosive energy (A>B>C>D).

Class II: Areas where combustible dusts are present and are divided into groups E, F and G.

Class III: Areas where ignitable fibers or flyings are present .

Division 1: Areas where ignitable concentrations of flammable or combustible materials are likely to exist all of the time or some of the time under normal operating conditions.

Division 2: Areas where ignitable concentrations of flammable or combustible materials are not likely to exist under normal operating conditions.

Ex Regulations

NEC Class & Division System Groups:

Area	Group	Representative Materials	Area
Class I, Division 1 & 2	A	Flammable gases, vapors or liquids	Acetylene
	B		Hydrogen, gas, butadiene, acrolein
	C		Ethylene, diethyl ether, carbon monoxide, acetaldehyde
	D		Propane, xylene, vinyl chloride, toluene, styrene
Class II, Division 1 & 2	E	Combustible dusts	Metal dusts, such as aluminum and magnesium
	F		Carbon black, coal dust, coke dust
	G		Flour, rain, sugar, spices
Class III, Division 1 & 2	None	Ignitable fibers or flyings	Cotton lint, rayon

CNS / GB / IEC / ATEX Zone System Groups:

Area	Group	Representative Materials	Area
Zone 0, 1 & 2	IIC	Flammable gases, vapors or liquids	Acetylene, hydrogen
	IIB		Ethylene, coal gas, butadiene, propylene, diethyl ether, ethylene oxide, propylene oxide
	IIA		Propane, acetaldehyde, acetone, ammonia, benzene, carbon monoxide, styrene, toluene, vinyl chloride
Zone 20, 21 & 22	IIIC	Combustible dusts	Conductive dusts, such as magnesium
	IIIB		Non-conductive dusts, such as flour, grain
	IIIA	Ignitable fibers or flyings	Cotton lint, rayon

※Please refer to each standard for further information.

MODEL

K35AG0

Industrial Indoor Wall Mount Handset Station

Characteristics

K35AG0

K31AG0

- Galvanized steel enclosure, powder coated, corrosion- resistant, impact-resistant and IP54 rated
- Stainless steel anti-loose screws
- 20 watt amplifier
- Single or five party lines for intercommunication
- Dual color LED light for power-on and off-hook
- Overload protection with current limiting and thermal shutdown circuits
- Modular PCB
- Fuse protection for power supply and speaker amplifier
- Surge protection for power supply
- Hook with magnetic reed switch
- Dynamic microphone for noise cancelling and feedback preventing
- Available for 110Vac or 220Vac
- Adjustable speaker volume from the front panel
- Mute setting of speaker
- With power supply and speaker amplifier
- Cable entry holes - Ø50x2 (suitable for 1 1/2″) or Ø35x2 (suitable for 1″), Ø28x1 (suitable for 3/4″)
- K35AG0 - Indoor Five Party Wall Mount Handset Station
- K31AG0 - Indoor Single Party Wall Mount Handset Station

MODEL

K35AG0

Specifications

	Model	K35AG0	K31AG0
	Party Line	Five Party	Single Party
Power	Voltage	110/220 Vac, 50/60 Hz	
	Power Consumption	Zero signal: 8.5VA/6.4W, max signal: 40VA/32W	
Handset Amplifier	Output Level	1.5 Vrms nominal into 33Ω load	
	Output Limit	1.5 Vrms nominal	
	Gain Control	56 dB nominal (below limiter level); adjustable from 40 to 63 dB	
	Frequency Response	250 ～ 4,000 Hz. +/-3 dB	
	Distortion	1.5% Max. THD @ 1,000 Hz	
	Control	Microphone gain, receiver volume and side tone adjustment	
Speaker Amplifier	Output	Push-Pull Class B, 12W	
	Gain Control	0.25 Vrms, at rated output	
	Frequency Response	250～4,000 Hz, +/-3dB reference to 1K Hz	
	Distortion	1% Max. THD @ 1,000 Hz, 12W	
	Input Impedance	50,000Ω, nominal	
	Output Impedance	8/16Ω	
	Output Adjustment	Speaker volume can be adjusted via front panel	
Handset	Material	ABS	
	Microphone	10Ω; noise-cancelling, dynamic	
	Receiver	150Ω; high-efficiency, dynamic	
	Cord	6 conductors retractile, 5-foot extended, PVC	
	Control	Page push button	
Environment	IP Degree	IP54	
	Ambient Temperature	-20°C～+50°C	
Packing	Dimensions	410(L) x 270(W) x 270(H) mm	
	Weight	7.8 kg	

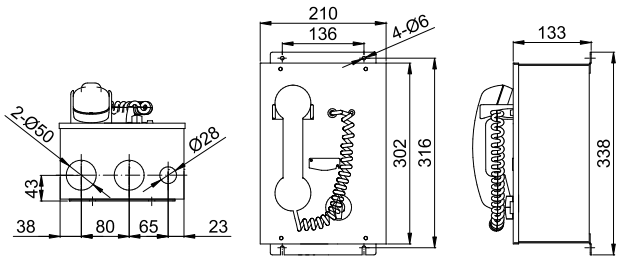

Bottom View Front View Right View

K35AG0 Unit: mm

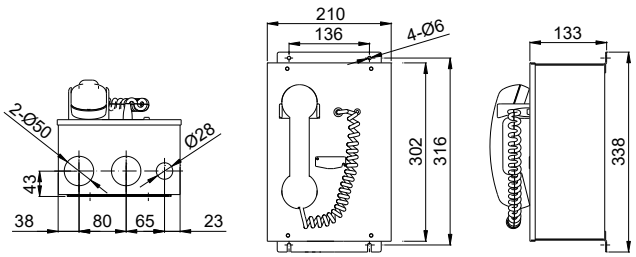

Bottom View Front View Right View

K31AG0 Unit: mm

MODEL

K35A40

Weather-proof Outdoor Wall Mount Handset Station

Characteristics

K35A40

K31A40

- Stainless Steel enclosure, corrosion-resistant, impact-resistant, IP66 rated
- Stainless steel anti-loose screws
- 20 watt amplifier
- Single or five party lines for intercommunication
- Dual color LED light for power-on and off-hook
- Overload protection with current limiting and thermal shutdown circuits
- Modular PCB
- Fuse protection for power supply and speaker amplifier
- Surge protection for power supply
- Hook with magnetic reed switch
- Dynamic microphone for noise cancelling and feedback preventing
- Available for 110Vac or 220Vac
- Adjustable speaker volume from the front panel
- Mute setting of speaker
- With power supply and speaker amplifier
- Cable entry holes - Ø50x2 (suitable for 1 1/2″) or Ø35x2 (suitable for 1″), Ø28x1 (suitable for 3/4″)
- K35A40 - Outdoor Five Party Wall Mount Handset Station
- K31A40 - Outdoor Single Party Wall Mount Handset Station

MODEL

K35A40

Specifications

	Model	K35A40	K31A40
	Party Line	Five Party	Single Party
Power	Voltage	110/220 Vac, 50/60 Hz	
	Power Consumption	Zero signal: 8.5VA/6.4W, max signal: 40VA/32W	
Handset Amplifier	Output Level	1.5 Vrms nominal into 33Ω load	
	Output Limit	1.5 Vrms nominal	
	Gain Control	56 dB nominal (below limiter level); adjustable from 40 to 63 dB	
	Frequency Response	250 ～ 4,000 Hz. +/-3 dB	
	Distortion	1.5% Max. THD @ 1,000 Hz	
	Control	Microphone gain, receiver volume and side tone adjustment	
Speaker Amplifier	Output	Push-Pull Class B, 12W	
	Gain Control	0.25Vrms, at rated output	
	Frequency Response	250～4,000 Hz, +/-3dB reference to 1K Hz	
	Distortion	1% Max. THD @ 1,000 Hz, 12W	
	Input Impedance	50,000Ω, nominal	
	Output Impedance	8/16Ω	
	Output Adjustment	Speaker volume can be adjusted via front panel	
Handset	Material	ABS	
	Microphone	10Ω; noise-cancelling, dynamic	
	Receiver	150Ω; high-efficiency, dynamic	
	Cord	6 conductors retractile, 5-foot extended, PVC	
	Control	Page push button	
Environment	IP Degree	IP66	
	Ambient Temperature	-20°C～+50°C	
Packing	Dimensions	570(L) x 360(W) x 310(H) mm	
	Weight	14.2 kg	

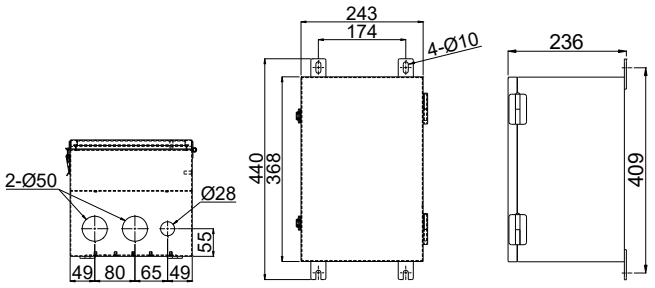

Bottom View　Front View　Front View
Unit: mm

K35A40 / K31A40

MODEL

K35A60

Weather-proof Outdoor Wall Mount Handset Station

Characteristics

K35A60 K31A60

- ABS enclosure, corrosion-resistant, impact-resistant, IP66 rated
- Stainless steel anti-loose screws
- 20 watt amplifier
- Single or five party lines for intercommunication
- Dual color LED light for power-on and off-hook
- Overload protection with current limiting and thermal shutdown circuits
- Modular PCB
- Fuse protection for power supply and speaker amplifier
- Surge protection for power supply
- Hook with magnetic reed switch
- Dynamic microphone for noise cancelling and feedback preventing
- Available for 110VAC or 220VAC
- Adjustable speaker volume from the front panel
- Mute setting of speaker
- With power supply and speaker amplifier
- Cable entry holes - Ø50x2 (suitable for 1 1/2″) or Ø35x2 (suitable for 1″), Ø28x1 (suitable for 3/4″)
- K35A60 - Outdoor Five Party Wall Mount Handset Station
- K31A60 - Outdoor Single Party Wall Mount Handset Station

MODEL

K35A60

Specifications

	Model	K35A60	K31A60
	Party Line	Five Party	Single Party
Power	Voltage	110/220 Vac, 50/60 Hz	
	Power Consumption	Zero signal: 8.5VA/6.4W, max signal: 40VA/32W	
Handset Amplifier	Output Level	1.5 Vrms nominal into 33Ω load	
	Output Limit	1.5 Vrms nominal	
	Gain Control	56 dB nominal (below limiter level); adjustable from 40 to 63 dB	
	Frequency Response	250～4,000 Hz. +/-3 dB	
	Distortion	1.5% Max. THD @ 1,000 Hz	
	Control	Microphone gain, receiver volume and side tone adjustment	
Speaker Amplifier	Output	Push-Pull Class B, 12W	
	Gain Control	0.25Vrms, at rated output	
	Frequency Response	250～4,000 Hz, +/-3dB reference to 1K Hz	
	Distortion	1% Max. THD @ 1,000 Hz, 12W	
	Input Impedance	50,000Ω, nominal	
	Output Impedance	8/16Ω	
	Output Adjustment	Speaker volume can be adjusted via front panel	
Handset	Material	ABS	
	Microphone	10Ω; noise-cancelling, dynamic	
	Receiver	150Ω; high-efficiency, dynamic	
	Cord	6 conductors retractile, 5-foot extended, PVC	
	Control	Page push button	
Environment	IP Degree	IP66	
	Ambient Temperature	-30℃～+50℃	
Packing	Dimensions	420(L) x 330(W) x 350(H) mm	
	Weight	8.6 kg	

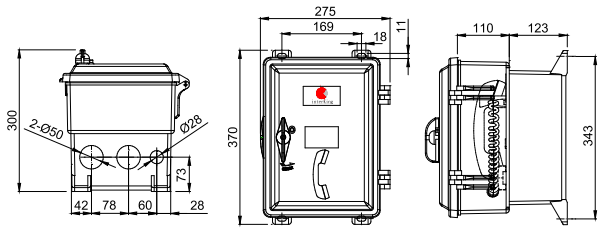

Bottom View Front View Right View

K35A60 Unit : mm

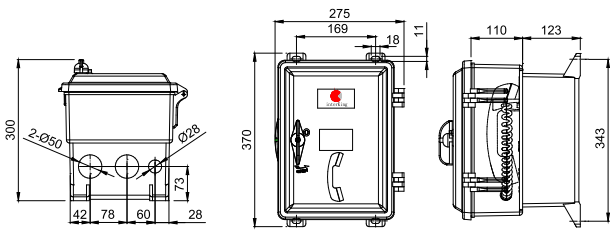

Bottom View Front View Right View

K31A60 Unit : mm

MODEL

K35AD0

Industrial Indoor Desktop Handset Station

Characteristics

K35AD0

K31AD0

- Steel panel and ABS enclosure, IP54 rated
- Galvanized steel amplifier enclosure, powder coated, corrosion-resistant and impact-resistant
- Special design for control room or office
- 20 watt amplifier
- Single or five party lines for intercommunication
- Dual color LED light for power-on and off-hook
- Built-in speaker and adjustable volume control
- Overload protection with current limiting and thermal shutdown circuits
- Modular PCB
- Fuse protection for power supply and speaker amplifier
- Surge protection for power supply
- Hook with magnetic reed switch
- Dynamic microphone for noise cancelling and feedback preventing
- Available for 110Vac or 220Vac
- Adjustable speaker volume from the front panel
- Mute setting of speaker
- With power supply and speaker amplifier
- Cable entry holes - Ø50x2 (suitable for 1 1/2″) or Ø35x2 (suitable for 1″), Ø28x1 (suitable for 3/4″)
- K35AD0 - Desktop Five Party Handset Station
- K31AD0 - Desktop Single Party Handset Station

MODEL

K35AD0

Specifications

	Model	K35AD0	K31AD0
	Party Line	Five Party	Single Party
Power	Voltage	110/220 Vac, 50/60 Hz	
	Power Consumption	Zero signal: 8.5VA/6.4W, max signal: 40VA/32W	
Handset Amplifier	Output Level	1.5 Vrms nominal into 33Ω load	
	Output Limit	1.5 Vrms nominal	
	Gain Control	56 dB nominal (below limiter level); adjustable from 40 to 63 dB	
	Frequency Response	250 ～ 4,000 Hz. +/-3 dB	
	Distortion	1.5% Max. THD @ 1,000 Hz	
	Control	Microphone gain, receiver volume and side tone adjustment	
Speaker Amplifier	Output	Push-Pull Class B, 12W	
	Gain Control	0.25Vrms, at rated output	
	Frequency Response	250～4,000 Hz, +/-3dB reference to 1K Hz	
	Distortion	1% Max. THD @ 1,000 Hz, 12W	
	Input Impedance	50,000Ω, nominal	
	Output Impedance	8/16Ω	
	Output Adjustment	Speaker volume can be adjusted via front panel	
Handset	Material	ABS	
	Microphone	10Ω; noise-cancelling, dynamic	
	Receiver	150Ω; high-efficiency, dynamic	
	Cord	6 conductors retractile, 5-foot extended, PVC	
	Control	Page push button	
Environment	IP Degree	IP54	
	Ambient Temperature	-20℃～+40℃	
Packing	Dimensions	550(L) x 450(W) x 310(H) mm	
	Weight	12.2kg	

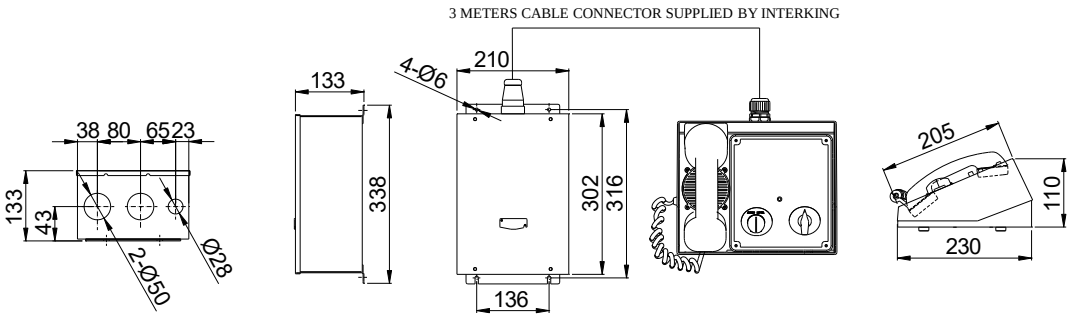

Bottom View | Right View | Right View | Front View | Right View

AMT002+EN1003 | DS5001

K35AD0 Unit : mm

MODEL

K35ADM

Industrial Desktop Handset Station
(W / Merge / Isolate Control)

Characteristics

K35ADM

K35ADM-M7

K35ADM-M14

- Steel panel and ABS enclosure, IP54 rated
- Galvanized steel amplifier enclosure, powder coated, corrosion-resistant and impact-resistant
- Special design for control room or office, with merge and isolate control function
- 20 watt amplifier
- Five party lines for intercommunication
- Dual color LED light for power-on and off-hook
- Built-in speaker and adjustable volume control
- Overload protection with current limiting and thermal shutdown circuits
- Modular PCB
- Fuse protection for power supply and speaker amplifier
- Surge protection for power supply
- Hook with magnetic reed switch
- Dynamic microphone for noise cancelling and feedback preventing
- Available for 110VAC or 220VAC
- Adjustable speaker volume from the front panel
- Mute setting of speaker
- With power supply and speaker amplifier
- Cable entry holes - Ø50x2 (suitable for 1 1/2″) or Ø35x2 (suitable for 1″), Ø28x1 (suitable for 3/4″)
- K35ADM - Desktop Five Party Handset Station (W/ Merge/ Isolate 5 Loop Control, 2-wire)
- K35ADM-M7 Desktop Five Party Handset Station (W/ Merge/ Isolate 7 Loop Control, 2-wire)
- K35ADM-M14 Desktop Five Party Handset Station (W/ Merge/ Isolate 14 Loop Control, 2-wire)

MODEL

K35ADM

Specifications

Model		K35ADM / K35ADM-M7 / K35ADM-M14
Party Line		Five Party
Power	Voltage	110/220 VAC, 50/60 Hz
	Power Consumption	Zero signal: 8.5VA/6.4W, max signal: 40VA/32W
Handset Amplifier	Output Level	1.5 Vrms nominal into 33Ω load
	Output Limit	1.5 Vrms nominal
	Gain Control	56 dB nominal (below limiter level); adjustable from 40 to 63 dB
	Frequency Response	250 ～ 4,000 Hz. +/-3 dB
	Distortion	1.5% Max. THD @ 1,000 Hz
	Control	Microphone gain, receiver volume and sidetone adjustment
Speaker Amplifier	Output	Push-Pull Class B, 12W
	Gain Control	0.25Vrms, at rated output
	Frequency Response	250～4,000 Hz, +/-3dB reference to 1K Hz
	Distortion	1% Max. THD @ 1,000 Hz, 12W
	Input Impedance	50,000Ω, nominal
	Output Impedance	8/16Ω
	Output Adjustment	Speaker volume can be adjusted via front panel
Handset	Material	ABS
	Microphone	10Ω; noise-cancelling, dynamic
	Receiver	150Ω; high-efficiency, dynamic
	Cord	6 conductors retractile, 5-foot extended, PVC
	Control	Page push button
Environment	Ambient Temperature	-30℃～+70℃
Packing	Dimensions	540(L) x 450(W) x 310(H) mm
	Weight	13.8 kg

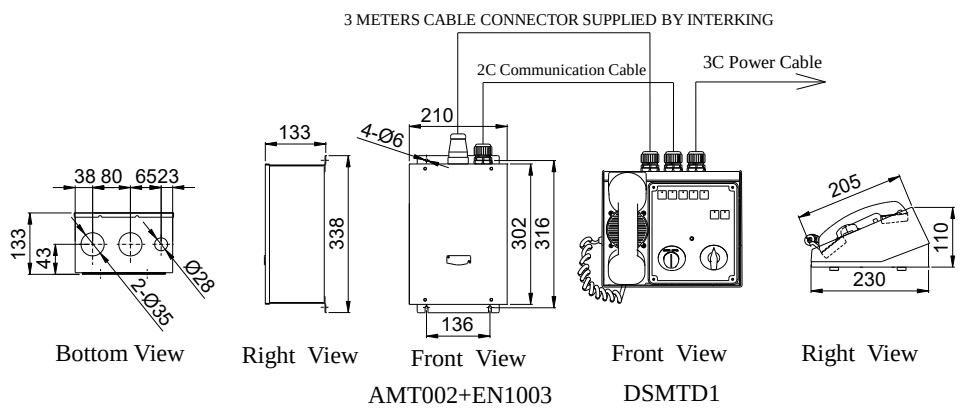

MODEL

K35AF0

Industrial Indoor Flush Mount Handset Station

Characteristics

K35AF0

K31AF0

- Galvanized steel enclosure, powder coated, corrosion-resistant and impact-resistant
- Stainless steel anti-loose screws
- Special design for control room or office
- 20 watt amplifier
- Single or five party lines for intercommunication
- Dual color LED light for power-on and off-hook
- Overload protection with current limiting and thermal shutdown circuits
- Modular PCB
- Fuse protection for power supply and speaker amplifier
- Surge protection for power supply
- Hook with magnetic reed switch
- Dynamic microphone for noise cancelling and feedback preventing
- Available for 110Vac or 220Vac
- Adjustable speaker volume from the front panel
- Mute setting of speaker
- With power supply and speaker amplifier
- Cable entry holes - Ø50x2 (suitable for 1 1/2″) or Ø35x2 (suitable for 1″), Ø28x1 (suitable for 3/4″)
- K35AF0 - Indoor Flush Mount Five Party Handset Station
- K31AF0 - Indoor Flush Mount Single Party Handset Station

MODEL

K35AF0

Specifications

	Model	K35AF0	K31AF0
	Party Line	Five Party	Single Party
Power	Voltage	110/220 Vac, 50/60 Hz	
	Power Consumption	Zero signal: 8.5VA/6.4W, max signal: 40VA/32W	
Handset Amplifier	Output Level	1.5 Vrms nominal into 33Ω load	
	Output Limit	1.5 Vrms nominal	
	Gain Control	56 dB nominal (below limiter level); adjustable from 40 to 63 dB	
	Frequency Response	250 ～ 4,000 Hz. +/-3 dB	
	Distortion	1.5% Max. THD @ 1,000 Hz	
	Control	Microphone gain, receiver volume and side tone adjustment	
Speaker Amplifier	Output	Push-Pull Class B, 12W	
	Gain Control	0.25Vrms, at rated output	
	Frequency Response	250～4,000 Hz, +/-3dB reference to 1K Hz	
	Distortion	1% Max. THD @ 1,000 Hz, 12W	
	Input Impedance	50,000Ω, nominal	
	Output Impedance	8/16Ω	
	Output Adjustment	Speaker volume can be adjusted via front panel	
Handset	Material	ABS	
	Microphone	10Ω; noise-cancelling, dynamic	
	Receiver	150Ω; high-efficiency, dynamic	
	Cord	6 conductors retractile, 5-foot extended, PVC	
	Control	Page push button	
Environment	Ambient Temperature	-30℃～+70℃	
Packing	Dimensions	410(L) x 320(W) x 330(H) mm	
	Weight	9.7 kg	

3 METERS CABLE CONNECTOR SUPPLIED BY INTERKING

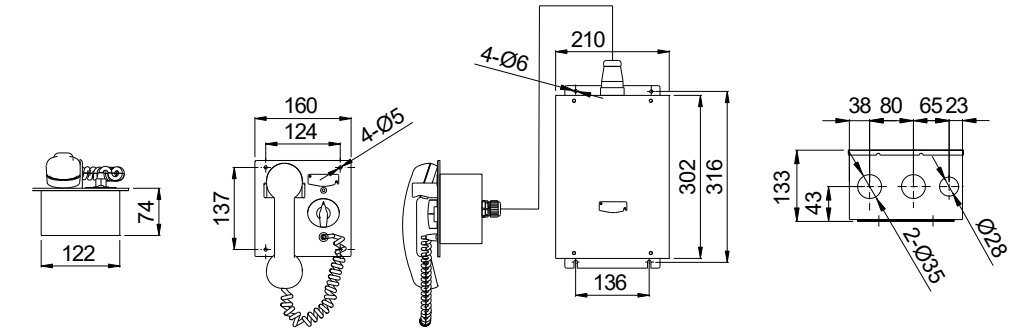

Bottom View | Front View | Right View | Front View | Bottom View

DF5001 | AMT002+EN1003

K35AF0 Unit : mm

MODEL

K35AS0

Industrial Indoor Side Mount Handset Station

Characteristics

K35AS0

K31AS0

- Galvanized steel enclosure, powder coated, corrosion-resistant and impact-resistant
- Stainless steel anti-loose screws
- Special design for control room or office
- 20 watt amplifier
- Single or five party lines for intercommunication
- Dual color LED light for power-on and off-hook
- Overload protection with current limiting and thermal shutdown circuits
- Modular PCB
- Fuse protection for power supply and speaker amplifier
- Surge protection for power supply
- Hook with magnetic reed switch
- Dynamic microphone for noise cancelling and feedback preventing
- Available for 110Vac or 220Vac
- Adjustable speaker volume from the front panel
- Mute setting of speaker
- With power supply and speaker amplifier
- Cable entry holes - Ø50x2 (suitable for 1 1/2″) or Ø35x2 (suitable for 1″), Ø28x1 (suitable for 3/4″)
- K35AS0 - Indoor Side Mount Five Party Handset Station
- K31AS0 - Indoor Side Mount Single Party Handset Station

MODEL

K35AS0

Specifications

	Model	K35AS0	K31AS0
	Party Line	Five Party	Single Party
Power	Voltage	110/220 Vac, 50/60 Hz	
	Power Consumption	Zero signal: 8.5VA/6.4W, max signal: 40VA/32W	
Handset Amplifier	Output Level	1.5 Vrms nominal into 33Ω load	
	Output Limit	1.5 Vrms nominal	
	Gain Control	56 dB nominal (below limiter level); adjustable from 40 to 63 dB	
	Frequency Response	250 ～ 4,000 Hz. +/-3 dB	
	Distortion	1.5% Max. THD @ 1,000 Hz	
	Control	Microphone gain, receiver volume and side tone adjustment	
Speaker Amplifier	Output	Push-Pull Class B, 12W	
	Gain Control	0.25Vrms, at rated output	
	Frequency Response	250～4,000 Hz, +/-3dB reference to 1K Hz	
	Distortion	1% Max. THD @ 1,000 Hz, 12W	
	Input Impedance	50,000Ω, nominal	
	Output Impedance	8/16Ω	
	Output Adjustment	Speaker volume can be adjusted via front panel	
Handset	Material	ABS	
	Microphone	10Ω; noise-cancelling, dynamic	
	Receiver	150Ω; high-efficiency, dynamic	
	Cord	6 conductors retractile, 5-foot extended, PVC	
	Control	Page push button	
Environment	Ambient Temperature	-30°C～+70°C	
Packing	Dimensions	410(L) x 307(W) x 320(H) mm	
	Weight	9.7 kg	

3 METERS CABLE CONNECTOR SUPPLIED BY INTERKING

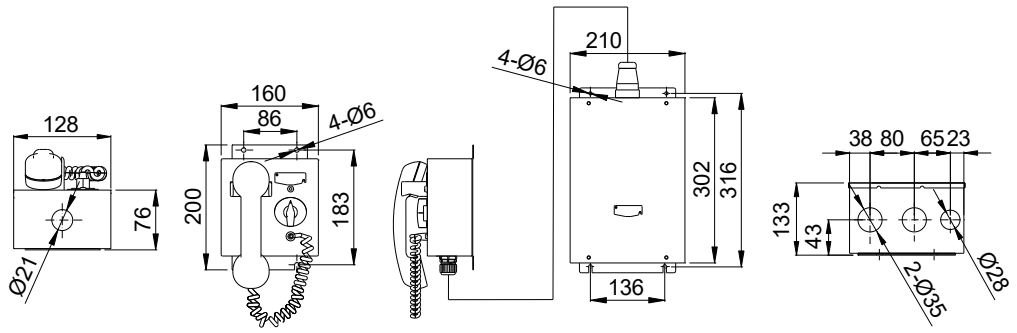

Bottom View | Front View | Right View | Front View | Bottom View

DS5002 AMT002+EN1003

K35AS0 Unit : mm

MODEL

K35AP0

Industrial Portable Handset Station

Characteristics

K35AP0

- Galvanized steel enclosure, powder coated, corrosion-resistant and impact-resistant
- Stainless steel anti-loose screws
- Portable design
- 20 watt amplifier
- Single or five party lines for intercommunication
- Dual color LED light for power-on and off-hook
- Built-in speaker and adjustable volume control
- Overload protection with current limiting and thermal shutdown circuits
- Modular PCB
- Fuse protection for power supply and speaker amplifier
- Surge protection for power supply
- Hook with magnetic reed switch
- Dynamic microphone for noise cancelling and feedback preventing
- Available for 110Vac or 220Vac
- Adjustable speaker volume from the front panel
- Mute setting of speaker
- With speaker amplifier
- Must be used with JB024-P to supply power for five party communication

MODEL

K35AP0

Specifications

Model		K35AP0
Party Line		Five Party (Must be connected with JB024-P)
Power	Voltage	110/220 Vac, 50/60 Hz
	Power Consumption	Zero signal: 8.5VA/6.4W, max signal: 40VA/32W
Handset Amplifier	Output Level	1.5 Vrms nominal into 33Ω load
	Output Limit	1.5 Vrms nominal
	Gain Control	56 dB nominal (below limiter level); adjustable from 40 to 63 dB
	Frequency Response	250 ～ 4,000 Hz. +/-3 dB
	Distortion	1.5% Max. THD @ 1,000 Hz
	Control	Microphone gain, receiver volume and side tone adjustment
Speaker Amplifier	Output	Push-Pull Class B, 12W
	Gain Control	0.25Vrms, at rated output
	Frequency Response	250～4,000 Hz, +/-3dB reference to 1K Hz
	Distortion	1% Max. THD @ 1,000 Hz, 12W
	Input Impedance	50,000Ω, nominal
	Output Impedance	8/16Ω
	Output Adjustment	Speaker volume can be adjusted via front panel
Handset	Material	ABS
	Microphone	10Ω; noise-cancelling, dynamic
	Receiver	150Ω; high-efficiency, dynamic
	Cord	6 conductors retractile, 5-foot extended, PVC
	Control	Page push button
Environment	Ambient Temperature	-30℃～+70℃
Packing	Dimensions	520(L) x 325(W) x 365(H) mm
	Weight	10 kg

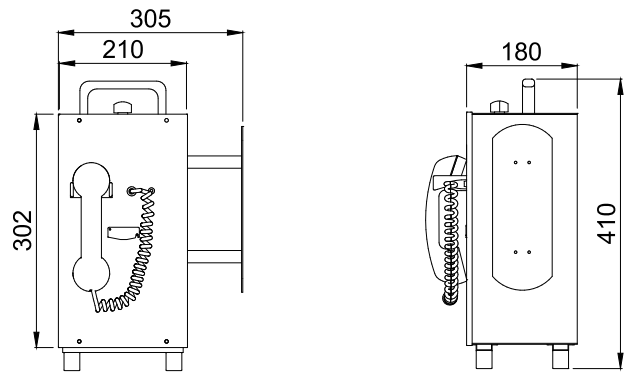

Front View　　Right View

K35AP0　　Unit : mm

MODEL

K3AAG0

Industrial Indoor Wall Mount Amplifier Station

Characteristics

K3AAG0

- Galvanized steel enclosure, powder coated, corrosion-resistant and impact-resistant, IP54 rated
- Stainless steel anti-loose screws
- 20 watt amplifier
- Power LED light
- Overload protection with current limiting and thermal shutdown circuits
- Modular PCB
- Fuse protection for power supply and speaker amplifier
- Surge protection for power supply
- Available for 110Vac or 220Vac
- Adjustable speaker volume from the front panel
- With power supply and speaker amplifier
- Cable entry holes – Ø50x2 (suitable for 1 1/2″) or Ø35x2 (suitable for 1″),Ø28x1 (suitable for 3/4″)

MODEL

K3AAG0

Specifications

Model		K3AAG0
Party Line		None
Power	Voltage	110/220 Vac, 50/60 Hz
	Power Consumption	Zero signal: 8.5VA/6.4W, max signal: 40VA/32W
Speaker Amplifier	Output	Push-Pull Class B, 12W
	Gain Control	0.25Vrms, at rated output
	Frequency Response	250～4,000 Hz, +/-3dB reference to 1K Hz
	Distortion	1% Max. THD @ 1,000 Hz, 12W
	Input Impedance	50,000Ω, nominal
	Output Impedance	8/16Ω
	Output Adjustment	Speaker volume can be adjusted via front panel
Environment	IP Degree	IP54
	Ambient Temperature	-30℃～+50℃
Packing	Dimensions	410(L) x 270(W) x 270(H) mm
	Weight	7.4kg

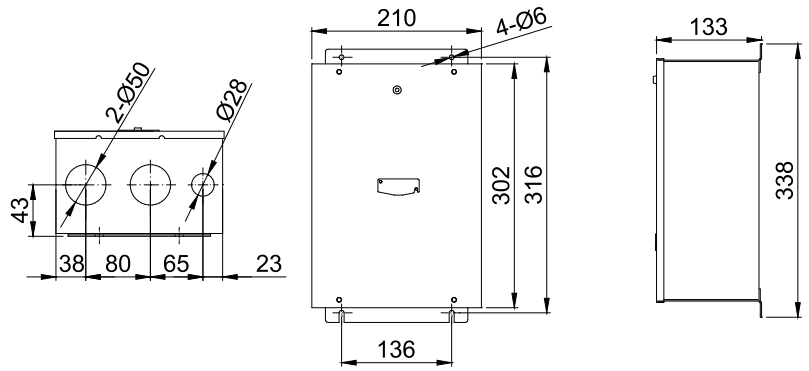

Bottom View | Front View | Right View

K3AAG0

Unit : mm

MODEL

K3AA40

Weather-proof
Outdoor Wall Mount Amplifier Station

Characteristics

K3AA40

- Stainless steel enclosure, corrosion-resistant, impact-resistant, IP66 rated
- Stainless steel anti-loose screws
- 20 watt amplifier
- Power LED light
- Overload protection with current limiting and thermal shutdown circuits
- Modular PCB
- Fuse protection for power supply and speaker amplifier
- Surge protection for power supply
- Available for 110Vac or 220Vac
- Adjustable speaker volume from the front panel
- With power supply and speaker amplifier
- Cable entry holes - Ø50x2 (suitable for 1 1/2″) or Ø35x2 (suitable for 1″), Ø28x1 (suitable for 3/4″)

MODEL

K3AA40

Specifications

Model		K3AA40
Party Line		None
Power	Voltage	110/220 Vac, 50/60 Hz
	Power Consumption	Zero signal: 8.5VA/6.4W, max signal: 40VA/32W
Speaker Amplifier	Output	Push-Pull Class B, 12W
	Gain Control	0.25Vrms, at rated output
	Frequency Response	250～4,000 Hz, +/-3dB reference to 1K Hz
	Distortion	1% Max. THD @ 1,000 Hz, 12W
	Input Impedance	50,000Ω, nominal
	Output Impedance	8/16Ω
	Output Adjustment	Speaker volume can be adjusted via front panel
Environment	IP Degree	IP66
	Ambient Temperature	-30℃～+50℃
Packing	Dimensions	570(L) x 360(W) x 310(H) mm
	Weight	14.2 kg

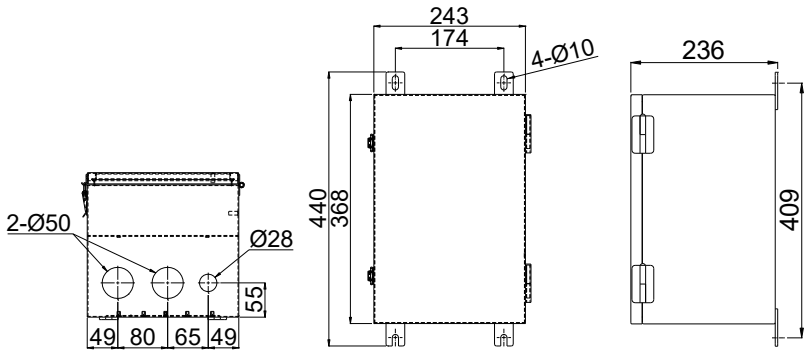

Bottom View | Front View | Right View

K3AA40 | Unit: mm

MODEL

K3AA60

Weather-proof
Outdoor Wall Mount Amplifier Station

Characteristics

K3AA60

- ABS enclosure, corrosion-resistant, impact-resistant, IP66 rated
- Stainless steel anti-loose screws
- 20 watt amplifier
- Power LED light
- Overload protection with current limiting and thermal shutdown circuits
- Modular PCB
- Fuse protection for power supply and speaker amplifier
- Surge protection for power supply
- Available for 110Vac or 220Vac
- Adjustable speaker volume from the front panel
- With power supply and speaker amplifier
- Cable entry holes - Ø50x2 (suitable for 1 1/2″) or Ø35x2 (suitable for 1″), Ø28x1 (suitable for 3/4″)

MODEL

K3AA60

Specifications

Model		K3AA60
Party Line		None
Power	Voltage	110/220 Vac, 50/60 Hz
	Power Consumption	Zero signal: 8.5VA/6.4W, max signal: 40VA/32W
Speaker Amplifier	Output	Push-Pull Class B, 12W
	Gain Control	0.25Vrms, at rated output
	Frequency Response	250～4,000 Hz, +/-3dB reference to 1K Hz
	Distortion	1% Max. THD @ 1,000 Hz, 12W
	Input Impedance	50,000Ω, nominal
	Output Impedance	8/16Ω
	Output Adjustment	Speaker volume can be adjusted via front panel
Environment	IP Degree	IP66
	Ambient Temperature	-30℃～+50℃
Packing	Dimensions	420(L) x 330(W) x 350(H) mm
	Weight	8 kg

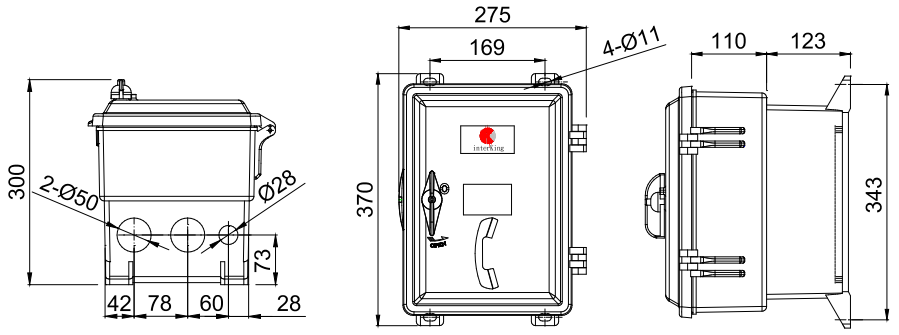

Bottom View　　Front View　　Right View

K3AA60　　Unit : mm

MODEL

K25AG0

Explosion-proof
Indoor Wall Mount Handset Station

Characteristics

K25AG0

K21AG0

- Galvanized steel enclosure, powder coated, corrosion-resistant, IP54 rated
- Stainless steel anti-loose screws
- 20 watt amplifier
- Single or five party lines for intercommunication
- Dual color LED light for power-on and off-hook
- Overload protection with current limiting and thermal shutdown circuits
- Modular PCB
- Fuse protection for power supply and speaker amplifier
- Surge protection for power supply
- Hook with magnetic reed switch
- Dynamic microphone for noise cancelling and feedback preventing
- Available for 110Vac or 220Vac
- Adjustable speaker volume from the front panel
- Mute setting of speaker
- With power supply and speaker amplifier
- CNS certified, Ex ec nC IIC T6 Gc / Ex tc IIIB T85°C Dc
- CQST certified, Ex ec ib IIC T6 Gc / Ex tc ib IIIB T80°C Dc
- UL certified, Class I, Division 2, Groups A, B, C and D; Class II, Division 2, Groups F and G; Class III, Division 2 Type 12
- Cable entry holes - Ø50x2 (suitable for 1 1/2″) or Ø35x2 (suitable for 1″), Ø28x1 (suitable for 3/4″)
- K25AG0 - Indoor Five Party Wall Mount Handset Station
- K21AG0 - Indoor Single Party Wall Mount Handset Station

MODEL

K25AG0

Specifications

	Model	K25AG0	K21AG0
	Party Line	Five Party	Single Party
Power	Voltage	110/220 Vac, 50/60 Hz	
	Power Consumption	Zero signal: 8.5VA/6.4W, max signal: 40VA/32W	
Handset Amplifier	Output Level	1.5 Vrms nominal into 33Ω load	
	Output Limit	1.5 Vrms nominal	
	Gain Control	56 dB nominal (below limiter level); adjustable from 40 to 63 dB	
	Frequency Response	250 ～ 4,000 Hz. +/-3 dB	
	Distortion	1.5% Max. THD @ 1,000 Hz	
	Control	Microphone gain, receiver volume and side tone adjustment	
Speaker Amplifier	Output	Push-Pull Class B, 12W	
	Gain Control	0.25Vrms, at rated output	
	Frequency Response	250～4,000 Hz, +/-3dB reference to 1K Hz	
	Distortion	1% Max. THD @ 1,000 Hz, 12W	
	Input Impedance	50,000Ω, nominal	
	Output Impedance	8/16Ω	
	Output Adjustment	Speaker volume can be adjusted via front panel	
Handset	Material	ABS	
	Microphone	10Ω; noise-cancelling, dynamic	
	Receiver	150Ω; high-efficiency, dynamic	
	Cord	6 conductors retractile, 5-foot extended, PVC	
	Control	Page push button	
Environment	IP Degree	IP54	
	Certification	CNS: Ex ec nC IIC T6 Gc / Ex tc IIIB T85°C Dc CQST: Ex ec ib IIC T6 Gc / Ex tc ib IIIB T80°C Dc UL: Class I, Division 2, Groups A, B, C and D; Class II, Division 2, Groups F and G; Class III, Division 2 Type 12	
	Ambient Temperature	-20°C～+50°C	
Packing	Dimensions	410(L) x 270(W) x 270(H) mm	
	Weight	7.8 kg	

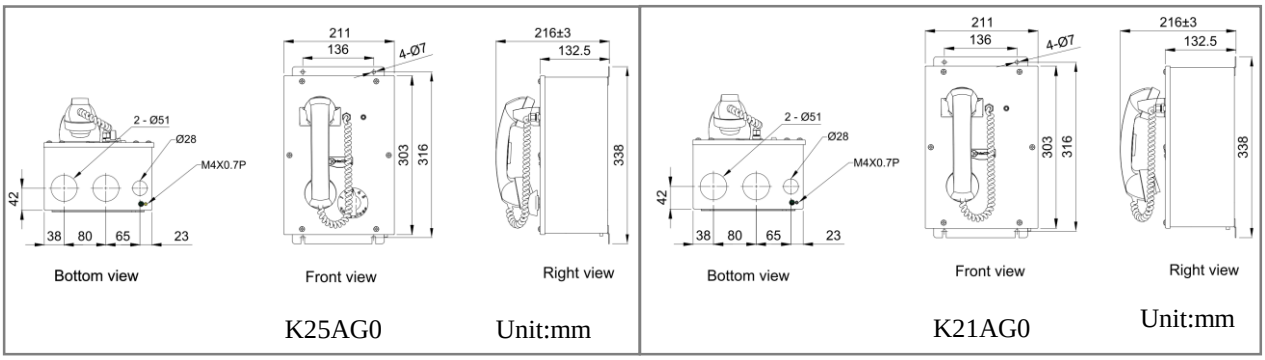

MODEL

K25A40

Explosion-proof
Outdoor Wall Mount Handset Station

Characteristics

K25A40

K21A40

- Stainless steel enclosure, corrosion-resistant, impact-resistant, IP66 rated
- Stainless steel anti-loose screws
- 20 watt amplifier
- Single or five party lines for intercommunication
- Dual color LED light for power-on and off-hook
- Overload protection with current limiting and thermal shutdown circuits
- Modular PCB
- Fuse protection for power supply and speaker amplifier
- Surge protection for power supply
- Hook with magnetic reed switch
- Dynamic microphone for noise cancelling and feedback preventing
- Available for 110Vac or 220Vac
- Adjustable speaker volume from the front panel
- Mute setting of speaker
- With power supply and speaker amplifier
- CNS certified, Ex nC IIC T6 Gc / Ex tc IIIB T85°C Dc
- UL certified, Class I, Division 2, Groups A, B, C and D; Class II, Division 2, Groups F and G; Class III, Division 2 Type 4X
- Cable entry holes - Ø50x2 (suitable for 1 1/2″) or Ø35x2 (suitable for 1″), Ø28x1 (suitable for 3/4″)
- K25A40 - Outdoor Five Party Wall Mount Handset Station
- K21A40 - Outdoor Single Party Wall Mount Handset Station

MODEL

K25A40

Specifications

	Model	K25A40	K21A40
	Party Line	Five Party	Single Party
Power	Voltage	110/220 Vac, 50/60 Hz	
	Power Consumption	Zero signal: 8.5VA/6.4W, max signal: 40VA/32W	
Handset Amplifier	Output Level	1.5 Vrms nominal into 33Ω load	
	Output Limit	1.5 Vrms nominal	
	Gain Control	56 dB nominal (below limiter level); adjustable from 40 to 63 dB	
	Frequency Response	250 ～ 4,000 Hz. +/-3 dB	
	Distortion	1.5% Max. THD @ 1,000 Hz	
	Control	Microphone gain, receiver volume and side tone adjustment	
Speaker Amplifier	Output	Push-Pull Class B, 12W	
	Gain Control	0.25Vrms, at rated output	
	Frequency Response	250～4,000 Hz, +/-3dB reference to 1K Hz	
	Distortion	1% Max. THD @ 1,000 Hz, 12W	
	Input Impedance	50,000Ω, nominal	
	Output Impedance	8/16Ω	
	Output Adjustment	Speaker volume can be adjusted via front panel	
Handset	Material	ABS	
	Microphone	10Ω; noise-cancelling, dynamic	
	Receiver	150Ω; high-efficiency, dynamic	
	Cord	6 conductors retractile, 5-foot extended, PVC	
	Control	Page push button	
Environment	IP Degree	IP66	
	Certification	CNS: Ex nC IIC T6 Gc / Ex tc IIIB T85℃ Dc UL: Class I, Division 2, Groups A, B, C and D; Class II, Division 2, Groups F and G; Class III, Division 2 Type 4X	
	Ambient Temperature	-20℃～+50℃	
Packing	Dimensions	570(L) x 360(W) x 310(H) mm	
	Weight	14.2 kg	

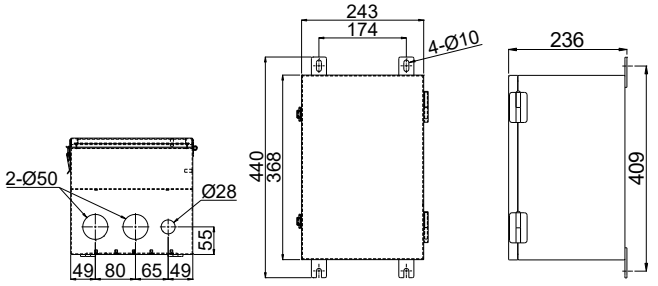

Bottom View Front View Right View

K25A40 / K21A40

Unit: mm

MODEL

K25A60

Explosion-proof
Outdoor Wall Mount Handset Station

Characteristics

K25A60

K21A60

- ABS enclosure, corrosion-resistant, impact-resistant, IP66 rated
- Stainless steel anti-loose screws
- 20 watt amplifier
- Single or five party lines for intercommunication
- Dual color LED light for power-on and off-hook
- Overload protection with current limiting and thermal shutdown circuits
- Modular PCB
- Fuse protection for power supply and speaker amplifier
- Surge protection for power supply
- Hook with magnetic reed switch
- Dynamic microphone for noise cancelling and feedback preventing
- Available for 110Vac or 220Vac
- Adjustable speaker volume from the front panel
- Mute setting of speaker
- With power supply and speaker amplifier
- CNS certified, Ex nC IIC T6 Gc / Ex tc IIIB T85°C Dc
- CQST certified, Ex ec ic IIC T6 Gc / Ex tc ib IIIC T80°C Dc
- Cable entry holes - Ø50x2 (suitable for 1 1/2″) or Ø35x2 (suitable for 1″), Ø28x1 (suitable for 3/4″)
- K25A60 - Outdoor Five Party Wall Mount Handset Station
- K21A60 - Outdoor Single Party Wall Mount Handset Station

MODEL

K25A60

Specifications

	Model	K25A60	K21A60
	Party Line	Five Party	Single Party
Power	Voltage	110/220 Vac, 50/60 Hz	
	Power Consumption	Zero signal: 8.5VA/6.4W, max signal: 40VA/32W	
Handset Amplifier	Output Level	1.5 Vrms nominal into 33Ω load	
	Output Limit	1.5 Vrms nominal	
	Gain Control	56 dB nominal (below limiter level); adjustable from 40 to 63 dB	
	Frequency Response	250 ～ 4,000 Hz. +/-3 dB	
	Distortion	1.5% Max. THD @ 1,000 Hz	
	Control	Microphone gain, receiver volume and side tone adjustment	
Speaker Amplifier	Output	Push-Pull Class B, 12W	
	Gain Control	0.25Vrms, at rated output	
	Frequency Response	250～4,000 Hz, +/-3dB reference to 1K Hz	
	Distortion	1% Max. THD @ 1,000 Hz, 12W	
	Input Impedance	50,000Ω, nominal	
	Output Impedance	8/16Ω	
	Output Adjustment	Speaker volume can be adjusted via front panel	
Handset	Material	ABS	
	Microphone	10Ω; noise-cancelling, dynamic	
	Receiver	150Ω; high-efficiency, dynamic	
	Cord	6 conductors retractile, 5-foot extended, PVC	
	Control	Page push button	
Environment	IP Degree	IP66	
	Certification	CNS: Ex nC IIC T6 Gc / Ex tc IIIB T85°C Dc CQST: Ex ec ic IIC T6 Gc / Ex tc ib IIIC T80°C Dc	
	Ambient Temperature	-20°C～+50°C	
Packing	Dimensions	420(L) x 330(W) x 350(H) mm	
	Weight	8.6 kg	

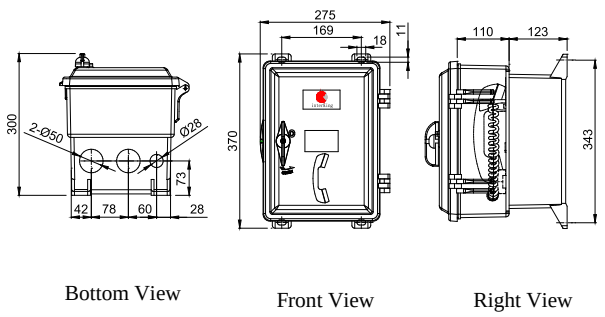

Bottom View Front View Right View

K25A60 Unit : mm

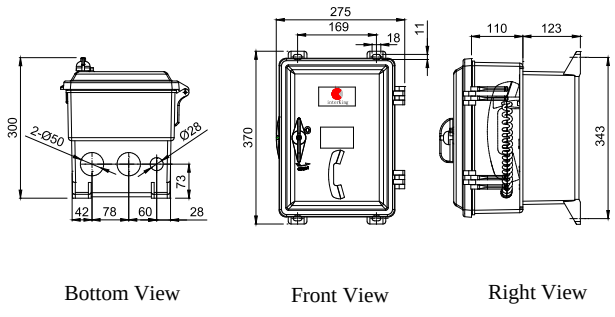

Bottom View Front View Right View

K21A60 Unit : mm

MODEL

K25AD0

Explosion-proof
Indoor Desktop Handset Station

Characteristics

K25AD0

K21AD0

- Steel panel and ABS enclosure, IP54 rated
- Galvanized steel amplifier enclosure, powder coated, corrosion-resistant, impact-resistant
- Special design for control room or office
- 20 watt amplifier
- Single or five party lines for intercommunication
- Dual color LED light for power-on and off-hook
- Built-in speaker and adjustable volume control
- Overload protection with current limiting and thermal shutdown circuits
- Modular PCB
- Fuse protection for power supply and speaker amplifier
- Surge protection for power supply
- Hook with magnetic reed switch
- Dynamic microphone for noise cancelling and feedback preventing
- Available for 110Vac or 220Vac
- Adjustable speaker volume from the front panel
- Mute setting of speaker
- With power supply and speaker amplifier
- CNS certified, Ex ec nC IIC T6 Gc
- UL certified, Class I, Division 2, Groups A, B, C and D
- Cable entry holes - Ø50x2 (suitable for 1 1/2″) or Ø35x2 (suitable for 1″), Ø28x1 (suitable for 3/4″)
- K25AD0 - Indoor Desktop Five Party Handset Station
- K21AD0 - Indoor Desktop Single Party Handset Station

MODEL

K25AD0

Specifications

	Model Party Line	K25AD0 Five Party	K21AD0 Single Party
Power	Voltage	110/220 Vac, 50/60 Hz	
	Power Consumption	Zero signal: 8.5VA/6.4W, max signal: 40VA/32W	
Handset Amplifier	Output Level	1.5 Vrms nominal into 33Ω load	
	Output Limit	1.5 Vrms nominal	
	Gain Control	56 dB nominal (below limiter level); adjustable from 40 to 63 dB	
	Frequency Response	250 ～ 4,000 Hz. +/-3 dB	
	Distortion	1.5% Max. THD @ 1,000 Hz	
	Control	Microphone gain, receiver volume and side tone adjustment	
Speaker Amplifier	Output	Push-Pull Class B, 12W	
	Gain Control	0.25Vrms, at rated output	
	Frequency Response	250～4,000 Hz, +/-3dB reference to 1K Hz	
	Distortion	1% Max. THD @ 1,000 Hz, 12W	
	Input Impedance	50,000Ω, nominal	
	Output Impedance	8/16Ω	
	Output Adjustment	Speaker volume can be adjusted via front panel	
Handset	Material	ABS	
	Microphone	10Ω; noise-cancelling, dynamic	
	Receiver	150Ω; high-efficiency, dynamic	
	Cord	6 conductors retractile, 5-foot extended, PVC	
	Control	Page push button	
Environment	Certification	CNS: Ex ec nC IIC T6 Gc UL: Class I, Division 2, Groups A, B, C and D	
	Ambient Temperature	-20℃～+40℃	
Packing	Dimensions	540(L) x 450(W) x 310(H) mm	
	Weight	12.2 kg	

3 METER CABLE CONNECTOR SUPPLIED INTERKING

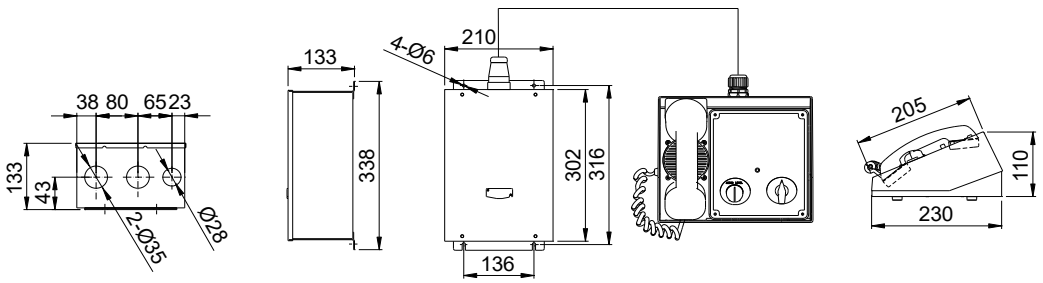

Bottom View | Right View | Front View AMTD02+EN1003 | Front View DS5001 | Right View

K25AD0

Unit : mm

K25AD0
Explosion-proof Indoor Desktop Handset Station

INTERKING ENTERPRISES LTD.
http://www.interking.com.tw
interKing

MODEL

K2AAG0

Explosion-proof
Indoor Wall Mount Amplifier Station

Characteristics

K2AAG0

- Galvanized steel enclosure, powder coated, corrosion- resistant, IP54 rated
- Stainless steel anti-loose screws
- 20 watt amplifier
- Power LED light
- Overload protection with current limiting and thermal shutdown circuits
- Modular PCB
- Fuse protection for power supply and speaker amplifier
- Surge protection for power supply
- Available for 110Vac or 220Vac
- Adjustable speaker volume from the front panel
- With power supply and speaker amplifier
- CNS certified, Ex ec nC IIC T6 Gc / Ex tc IIIB T85°C Dc
- CQST certified, Ex ec ib IIC T6 Gc / Ex tc ib IIIB T80°C Dc
- UL certified, Class I, Division 2, Groups A, B, C and D; Class II, Division 2, Groups F and G; Class III, Division 2 Type 12
- Cable entry holes - Ø50x2 (suitable for 1 1/2″) or Ø35x2 (suitable for 1″), Ø28x1 (suitable for 3/4″)

MODEL

K2AAG0

Specifications

Model		K2AAG0
Party Line		None
Power	Voltage	110/220 Vac, 50/60 Hz
	Power Consumption	Zero signal: 8.5VA/6.4W, max signal: 40VA/32W
Speaker Amplifier	Output	Push-Pull Class B, 12W
	Gain Control	0.25 Vrms, at rated output
	Frequency Response	250～4,000 Hz, +/-3dB reference to 1K Hz
	Distortion	1% Max. THD @ 1,000 Hz, 12W
	Input Impedance	50,000Ω, nominal
	Output Impedance	8/16Ω
	Output Adjustment	Speaker volume can be adjusted via front panel
Environment	IP Degree	IP54
	Certification	CNS: Ex ec nC IIC T6 Gc / Ex tc IIIB T85°C Dc CQST: Ex ec ib IIC T6 Gc / Ex tc ib IIIB T80°C Dc UL: Class I, Division 2, Groups A, B, C and D; Class II, Division 2, Groups F and G; Class III, Division 2 Type 12
	Ambient Temperature	-20°C～+50°C
Packing	Dimensions	410(L) x 270(W) x 270(H) mm
	Weight	7.4 kg

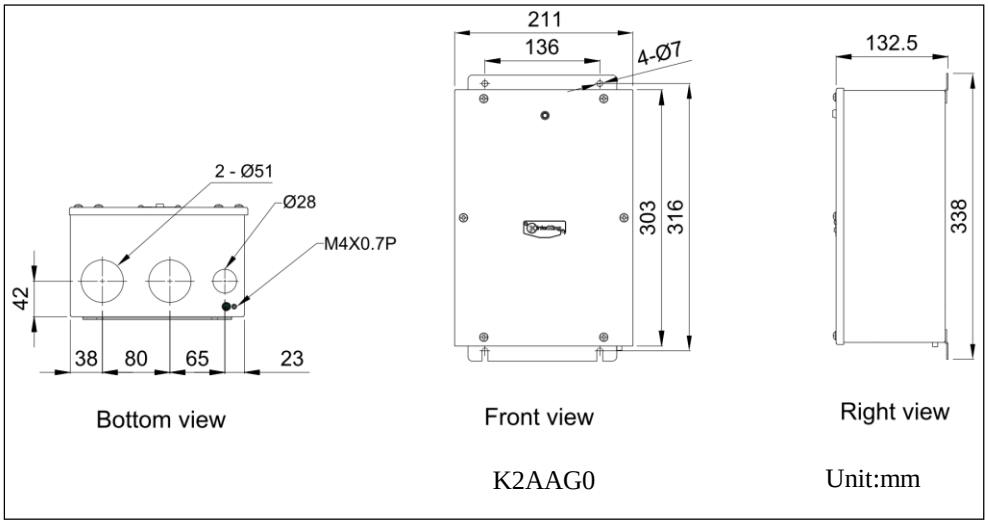

MODEL

K2AA40

Explosion-proof
Outdoor Wall Mount Amplifier Station

Characteristics

K2AA40

- Stainless steel enclosure, corrosion-resistant, impact-resistant, IP66 rated
- Stainless steel anti-loose screws
- 20 watt amplifier
- Power LED light
- Overload protection with current limiting and thermal shutdown circuits
- Modular PCB
- Fuse protection for power supply and speaker amplifier
- Surge protection for power supply
- Available for 110Vac or 220Vac
- Adjustable speaker volume from the front panel
- With power supply and speaker amplifier
- CNS certified, Ex nC IIC T6 Gc / Ex tc IIIB T85°C Dc
- UL certified, Class I, Division 2, Groups A, B, C and D; Class II, Division 2, Groups F and G; Class III, Division 2 Type 4X
- Cable entry holes - Ø50x2 (suitable for 1 1/2″) or Ø35x2 (suitable for 1″), Ø28x1 (suitable for 3/4″)

MODEL

K2AA40

Specifications

Model		K2AA40
Party Line		None
Power	Voltage	110/220 Vac, 50/60 Hz
	Power Consumption	Zero signal: 8.5VA/6.4W, max signal: 40VA/32W
Speaker Amplifier	Output	Push-Pull Class B, 12W
	Gain Control	0.25 Vrms, at rated output
	Frequency Response	250～4,000 Hz, +/-3dB reference to 1K Hz
	Distortion	1% Max. THD @ 1,000 Hz, 12W
	Input Impedance	50,000Ω, nominal
	Output Impedance	8/16Ω
	Output Adjustment	Speaker volume can be adjusted via front panel
Environment	IP Degree	IP66
	Certification	CNS: Ex nC IIC T6 Gc / Ex tc IIIB T85°C Dc UL: Class I, Division 2, Groups A, B, C and D; Class II, Division 2, Groups F and G; Class III, Division 2 Type 4X
	Ambient Temperature	-20°C～+50°C
Packing	Dimensions	570(L) x 360(W) x 310(H) mm
	Weight	13.8 kg

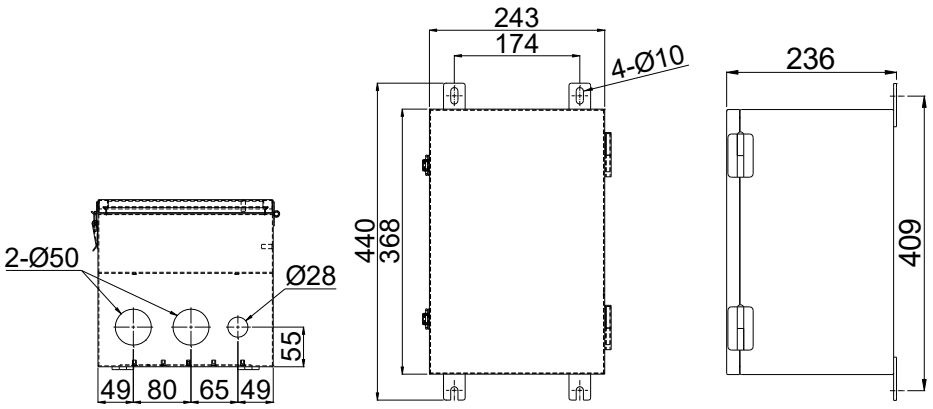

Bottom View　　Front View　　Right View

K2AA40　　Unit: mm

MODEL

K2AA60

Explosion-proof
Outdoor Wall Mount Amplifier Station

Characteristics

K2AA60

- ABS enclosure, corrosion-resistant, impact-resistant, IP66 rated
- Stainless steel anti-loose screws
- 20 watt amplifier
- Power LED light
- Overload protection with current limiting and thermal shutdown circuits
- Modular PCB
- Fuse protection for power supply and speaker amplifier
- Surge protection for power supply
- Available for 110Vac or 220Vac
- Adjustable speaker volume from the front panel
- With power supply and speaker amplifier
- CNS certified, Ex nC IIC T6 Gc / Ex tc IIIB T85°C Dc
- CQST certified, Ex ec ic IIC T6 Gc / Ex tc ib IIIC T80°C Dc
- Cable entry holes - Ø50x2 (suitable for 1 1/2″) or Ø35x2 (suitable for 1″), Ø28x1 (suitable for 3/4″)

MODEL

K2AA60

Specifications

Model		K2AA60
Party Line		None
Power	Voltage	110/220 Vac, 50/60 Hz
	Power Consumption	Zero signal: 8.5VA/6.4W, max signal: 40VA/32W
Speaker Amplifier	Output	Push-Pull Class B, 12W
	Gain Control	0.25 Vrms, at rated output
	Frequency Response	250～4,000 Hz, +/-3dB reference to 1K Hz
	Distortion	1% Max. THD @ 1,000 Hz, 12W
	Input Impedance	50,000Ω, nominal
	Output Impedance	8/16Ω
	Output Adjustment	Speaker volume can be adjusted via front panel
Environment	IP Degree	IP66
	Certification	CNS: Ex nC IIC T6 Gc / Ex tc IIIB T85°C Dc CQST: Ex ec ic IIC T6 Gc / Ex tc ib IIIC T80°C Dc
	Ambient Temperature	-20°C～+50°C
Packing	Dimensions	420(L) x 330(W) x 350(H) mm
	Weight	8 kg

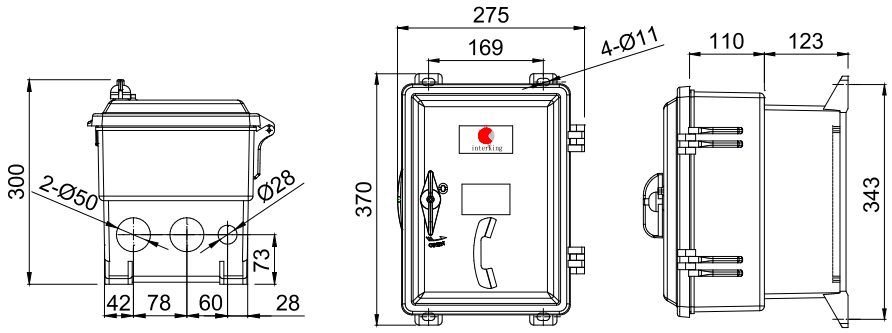

Bottom View　　Front View　　Right View

K2AA60　　Unit : mm

MODEL

K15AG0

Explosion-proof
Indoor Wall Mount Handset Station

Characteristics

K15AG0

K11AG0

- Aluminum alloy enclosure, powder coated, corrosion-resistant, impact-resistant, IP65 rated
- 20 watt amplifier
- Single or five party lines for intercommunication
- Dual color LED light for power-on and off-hook
- Overload protection with current limiting and thermal shutdown circuits
- Modular PCB
- Fuse protection for power supply and speaker amplifier
- Surge protection for power supply
- Hook with magnetic reed switch
- Dynamic microphone for noise cancelling and feedback preventing
- Available for 110Vac or 220Vac
- Adjustable speaker volume from the internal front panel
- Mute setting of speaker
- With power supply and speaker amplifier
- CNS certified, Ex d ib IIB+H_2 T6 Gb / Ex ib tb IIIC T85°C Db
- CQST certified, Ex db ib IIB+H_2 T6 Gb / Ex tb ib IIIC T80°C Db
- Cable entry - 1″ NPT x 2, 3/4″ NPT x 1
- K15AG0 - Indoor Five Party Wall Mount Handset Station
- K11AG0 - Indoor Single Party Wall Mount Handset Station

MODEL

K15AG0

Specifications

	Model Party Line	K15AG0 Five Party	K11AG0 Single Party
Power	Voltage	110/220 Vac, 50/60 Hz	
	Power Consumption	Zero signal: 8.5VA/6.4W, max signal: 40VA/32W	
Handset Amplifier	Output Level	1.5 Vrms nominal into 33Ω load	
	Output Limit	1.5 Vrms nominal	
	Gain Control	56 dB nominal (below limiter level); adjustable from 40 to 63 dB	
	Frequency Response	250 ～ 4,000 Hz. +/-3 dB	
	Distortion	1.5% Max. THD @ 1,000 Hz	
	Control	Microphone gain, receiver volume and sidetone adjustment	
Speaker Amplifier	Output	Push-Pull Class B, 12W	
	Gain Control	0.25 Vrms, at rated output	
	Frequency Response	250～4,000 Hz, +/-3dB reference to 1K Hz	
	Distortion	1% Max. THD @ 1,000 Hz, 12W	
	Input Impedance	50,000Ω, nominal	
	Output Impedance	8/16Ω	
	Output Adjustment	Speaker volume can be adjusted via the internal front panel	
Handset	Material	ABS	
	Microphone	10Ω; noise-cancelling, dynamic	
	Receiver	150Ω; high-efficiency, dynamic	
	Cord	4 conductors retractile, 5-foot extended, PVC	
	Control	Page push button	
Environment	IP Degree	IP65	
	Certification	CNS: Ex d ib IIB+H_2 T6 Gb / Ex ib tb IIIC T85°C Db CQST: Ex db ib IIB+H_2 T6 Gb / Ex tb ib IIIC T80°C Db	
	Ambient Temperature	-20°C～+50°C	
Packing	Dimensions	420(L) x 330(W) x 320(H) mm	
	Weight	18.6 kg	

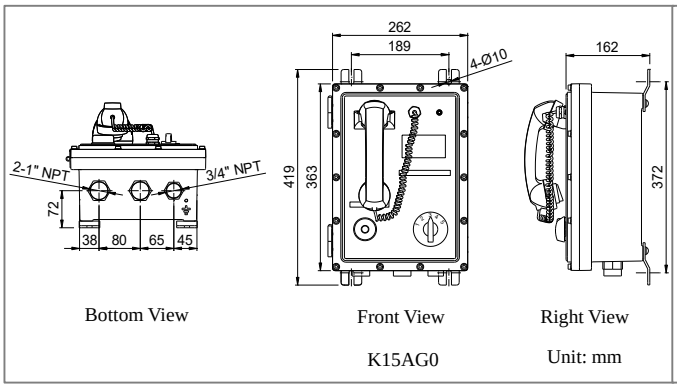

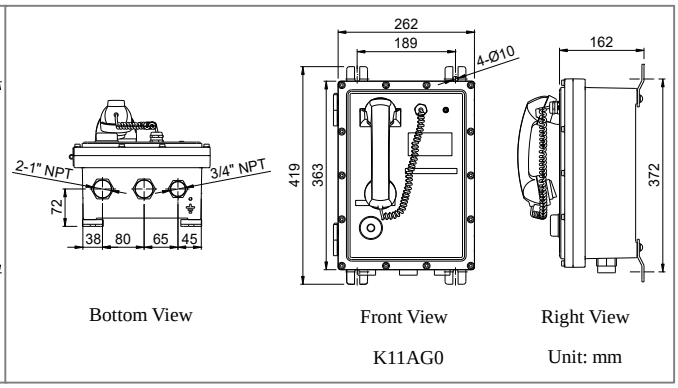

MODEL

K15A40

Explosion-proof
Outdoor Wall Mount Handset Station

Characteristics

K15A40

K11A40

- Aluminum alloy enclosure, impact-resistant, corrosion-resistant, IP66 rated
- 20 watt amplifier
- Single or five party lines for intercommunication
- Dual color LED light for power-on and off-hook
- Overload protection with current limiting and thermal shutdown circuits
- Modular PCB
- Fuse protection for power supply and speaker amplifier
- Surge protection for power supply
- Hook with magnetic reed switch
- Dynamic microphone for noise cancelling and feedback preventing
- Available for 110Vac or 220Vac
- Adjustable speaker volume from the internal front panel
- Mute setting of speaker
- With power supply and speaker amplifier
- CNS certified, Ex d ib IIB+H_2 T6 Gb / Ex ib tb IIIC T85℃ Db
- Cable entry - 1″ NPT x 2, 3/4″ NPT x 1
- K15A40 - Outdoor Five Party Wall Mount Handset Station
- K11A40 - Outdoor Single Party Wall Mount Handset Station

MODEL

K15A40

Specifications

	Model	K15A40	K11A40
	Party Line	Five Party	Single Party
Power	Voltage	110/220 Vac, 50/60 Hz	
	Power Consumption	Zero signal: 8.5VA/6.4W, max signal: 40VA/32W	
Handset Amplifier	Output Level	1.5 Vrms nominal into 33Ω load	
	Output Limit	1.5 Vrms nominal	
	Gain Control	56 dB nominal (below limiter level); adjustable from 40 to 63 dB	
	Frequency Response	250 ～ 4,000 Hz. +/-3 dB	
	Distortion	1.5% Max. THD @ 1,000 Hz	
	Control	Microphone gain, receiver volume and side tone adjustment	
Speaker Amplifier	Output	Push-Pull Class B, 12W	
	Gain Control	0.25 Vrms, at rated output	
	Frequency Response	250～4,000 Hz, +/-3dB reference to 1K Hz	
	Distortion	1% Max. THD @ 1,000 Hz, 12W	
	Input Impedance	50,000Ω, nominal	
	Output Impedance	8/16Ω	
	Output Adjustment	Speaker volume can be adjusted via the internal front panel	
Handset	Material	ABS	
	Microphone	10Ω; noise-cancelling, dynamic	
	Receiver	150Ω; high-efficiency, dynamic	
	Cord	4 conductors retractile, 5-foot extended, PVC	
	Control	Page push button	
Environment	IP Degree	IP66	
	Certification	CNS: Ex d ib IIB+H_2 T6 Gb / Ex ib tb IIIC T85℃ Db	
	Ambient Temperature	-20℃～+40℃	
Packing	Dimensions	420(L) x 330(W) x 350(H) mm	
	Weight	22.6 kg	

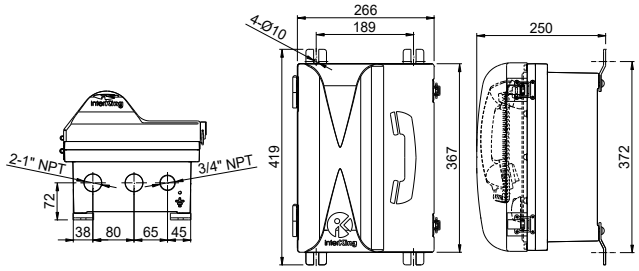

Bottom View Front View Right View

K15A40 Unit : mm

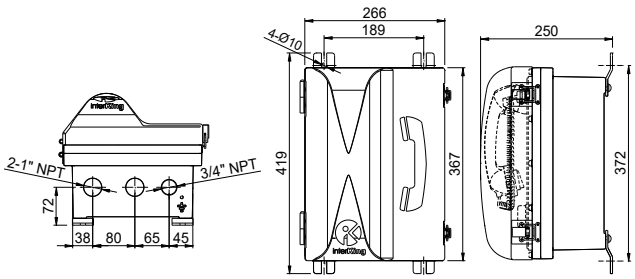

Bottom View Front View Right View

K11A40 Unit : mm

MODEL

K1AAG0

Explosion-proof
Indoor Wall Mount Amplifier Station

Characteristics

K1AAG0

- Aluminum alloy enclosure, powder coated, corrosion-resistant, impact-resistant, IP65 rated
- 20 watt amplifier
- Overload protection with current limiting and thermal shutdown circuits
- Modular PCB
- Fuse protection for power supply and speaker amplifier
- Surge protection for power supply
- Available for 110Vac or 220Vac
- Adjustable speaker volume from the internal front panel
- With power supply and speaker amplifier
- CNS certified, Ex d ib IIB+H_2 T6 Gb / Ex ib tb IIIC T85°C Db
- CQST certified, Ex db ib IIB+H_2 T6 Gb / Ex tb ib IIIC T80°C Db
- Cable entry - 1″ NPT x 2, 3/4″ NPT x 1

MODEL

K1AAG0

Specifications

Model		K1AAG0
Party Line		None
Power	Voltage	110/220 Vac, 50/60 Hz
	Power Consumption	Zero signal: 8.5VA/6.4W, max signal: 40VA/32W
Speaker Amplifier	Output	Push-Pull Class B, 12W
	Gain Control	0.25Vrms, at rated output
	Frequency Response	250～4,000 Hz, +/-3dB reference to 1K Hz
	Distortion	1% Max. THD @ 1,000 Hz, 12W
	Input Impedance	50,000Ω, nominal
	Output Impedance	8/16Ω
	Output Adjustment	Speaker volume can be adjusted via the internal front panel
Environment	IP Degree	IP65
	Certification	CNS: Ex d ib IIB+H_2 T6 Gb / Ex ib tb IIIC T85°C Db CQST: Ex db ib IIB+H_2 T6 Gb / Ex tb ib IIIC T80°C Db
	Ambient Temperature	-20°C～+50°C
Packing	Dimensions	420(L) x 330(W) x 320(H) mm
	Weight	15.5 kg

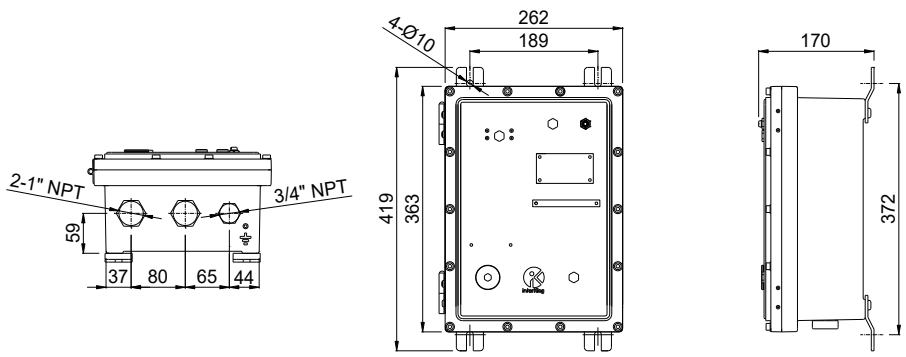

Bottom View

Front View

K1AAG0

Right View

Unit: mm

MODEL

K1AA40

Explosion-proof
Outdoor Wall Mount Amplifier Station

Characteristics

K1AA40

- Aluminum alloy enclosure, powder coated, corrosion- resistant, impact-resistant, IP66 rated
- 20 watt amplifier
- Overload protection with current limiting and thermal shutdown circuits
- Modular PCB
- Fuse protection for power supply and speaker amplifier
- Surge protection for power supply
- Available for 110Vac or 220Vac
- Adjustable speaker volume from the internal front panel
- With power supply and speaker amplifier
- CNS certified, Ex d ib IIB+H_2 T6 Gb / Ex ib tb IIIC T85°C Db
- Cable entry - 1″ NPT x 2, 3/4″ NPT x 1

MODEL

K1AA40

Specifications

Model		K1AA40
Party Line		None
Power	Voltage	110/220 Vac, 50/60 Hz
	Power Consumption	Zero signal: 8.5VA/6.4W, max signal: 40VA/32W
Speaker Amplifier	Output	Push-Pull Class B, 12W
	Gain Control	0.25Vrms, at rated output
	Frequency Response	250～4,000 Hz, +/-3dB reference to 1K Hz
	Distortion	1% Max. THD @ 1,000 Hz, 12W
	Input Impedance	50,000Ω, nominal
	Output Impedance	8/16Ω
	Output Adjustment	Speaker volume can be adjusted via the internal front panel
Environment	IP Degree	IP66
	Certification	CNS: Ex d ib IIB+H_2 T6 Gb / Ex ib tb IIIC T85°C Db
	Ambient Temperature	-20°C～+40°C
Packing	Dimensions	420(L) x 330(W) x 350(H) mm
	Weight	19.6 kg

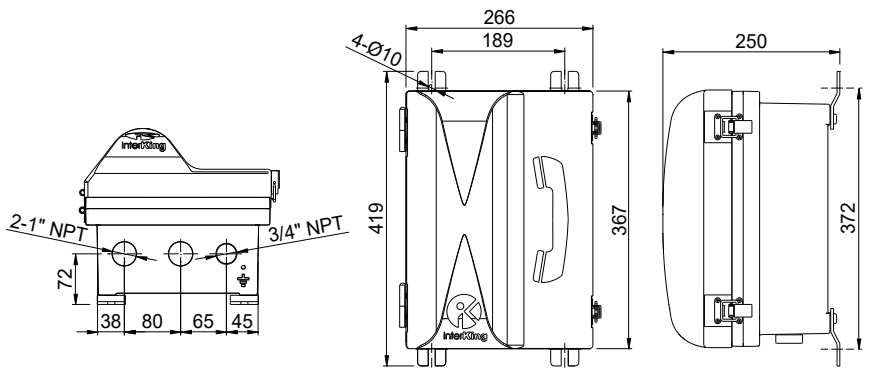

Bottom View | Front View | Right View

K1AA40 | Unit : mm

MODEL

K35DG0

Intelligent
Industrial Indoor Wall Mount Handset Station

Characteristics

K35DG0

K31DG0

- Galvanized steel enclosure, powder coated, corrosion- resistant, IP54 rated
- Stainless steel anti-loose screws
- 20 watt amplifier
- Single or five party lines for intercommunication
- Dual color LED light for power-on and off-hook
- Overload protection with current limiting and thermal shutdown circuits
- Modular PCB
- Fuse protection for power supply and speaker amplifier
- Surge protection for power supply
- Hook with magnetic reed switch
- Dynamic microphone for noise cancelling and feedback preventing
- Available for 110Vac or 220Vac
- Adjustable speaker volume from the front panel
- Mute setting of speaker
- With power supply and speaker amplifier
- Address setting, automatically adjusting speaker volume by measuring ambient noise
- Two DI & DO for control
- Pre-broadcast tone and self-detection sound of speaker
- Cable entry holes - Ø50x2 (suitable for 1 1/2″) or Ø35x2 (suitable for 1″), Ø28x1 (suitable for 3/4″)
- K35DG0 - Indoor Five Party Wall Mount Handset Station
- K31DG0 - Indoor Single Party Wall Mount Handset Station

MODEL

K35DG0

Specifications

	Model	K35DG0	K31DG0
	Party Line	Five Party	Single Party
Power	Voltage	110/220 Vac, 50/60 Hz	
	Power Consumption	Zero signal: 8.5VA/6.4W, max signal: 40VA/32W	
Handset Amplifier	Output Level	1.5 Vrms nominal into 33Ω load	
	Output Limit	1.5 Vrms nominal	
	Gain Control	56 dB nominal (below limiter level); adjustable from 40 to 63 dB	
	Frequency Response	250 ～ 4,000 Hz. +/-3 dB	
	Distortion	1.5% Max. THD @ 1,000 Hz	
	Control	Microphone gain, receiver volume and side tone adjustment	
Speaker Amplifier	Output	Push-Pull Class B, 12W	
	Gain Control	0.25Vrms, at rated output	
	Frequency Response	250～4,000 Hz, +/-3dB reference to 1K Hz	
	Distortion	1% Max. THD @ 1,000 Hz, 12W	
	Input Impedance	50,000Ω, nominal	
	Output Impedance	8/16Ω	
	Output Adjustment	Speaker volume can be adjusted via front panel	
Handset	Material	ABS	
	Microphone	10Ω; noise-cancelling, dynamic	
	Receiver	150Ω; high-efficiency, dynamic	
	Cord	6 conductors retractile, 5-foot extended, PVC	
	Control	Page push button	
Environment	Ambient Temperature	-30℃～+70℃	
Packing	Dimensions	410(L) x 270(W) x 270(H) mm	
	Weight	7.9 kg	

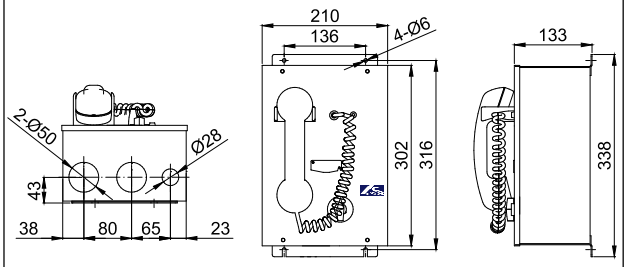

Bottom View　Front View　Right View

K35DG0　Unit : mm

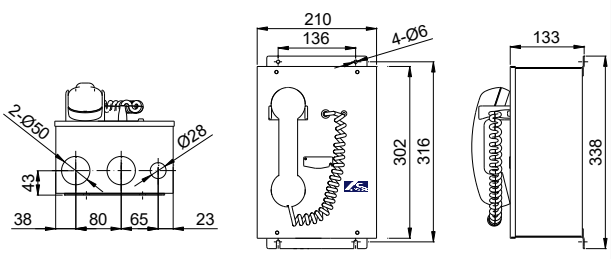

Top View　Front View　Right View

K31DG0　Unit : mm

MODEL

K35D40

Intelligent Weather-proof
Outdoor Wall Mount Handset Station

Characteristics

K35D40

K31D40

- Stainless steel enclosure, corrosion-resistant, impact-resistant, IP66 rated
- Stainless steel anti-loose screws
- 20 watt amplifier
- Single or five party lines for intercommunication
- Dual color LED light for power-on and off-hook
- Overload protection with current limiting and thermal shutdown circuits
- Modular PCB
- Fuse protection for power supply and speaker amplifier
- Surge protection for power supply
- Hook with magnetic reed switch
- Dynamic microphone for noise cancelling and feedback preventing
- Available for 110Vac or 220Vac
- Adjustable speaker volume from the front panel
- Mute setting of speaker
- With power supply and speaker amplifier
- Address setting, automatically adjusting speaker volume by measuring ambient noise
- Two DI & DO for control
- Pre-broadcast tone and self-detection sound of speaker
- Cable entry holes - Ø50x2 (suitable for 1 1/2″) or Ø35x2 (suitable for 1″),Ø28x1 (suitable for 3/4″)
- K35D40 - Outdoor Five Party Wall Mount Handset Station
- K31D40 - Outdoor Single Party Wall Mount Handset Station

MODEL

K35D40

Specifications

	Model	K35D40	K31D40
	Party Line	Five Party	Single Party
Power	Voltage	110/220 Vac, 50/60 Hz	
	Power Consumption	Zero signal: 8.5VA/6.4W, max signal: 40VA/32W	
Handset Amplifier	Output Level	1.5 Vrms nominal into 33Ω load	
	Output Limit	1.5 Vrms nominal	
	Gain Control	56 dB nominal (below limiter level); adjustable from 40 to 63 dB	
	Frequency Response	250 ～ 4,000 Hz. +/-3 dB	
	Distortion	1.5% Max. THD @ 1,000 Hz	
	Control	Microphone gain, receiver volume and side tone adjustment	
Speaker Amplifier	Output	Push-Pull Class B, 12W	
	Gain Control	0.25Vrms, at rated output	
	Frequency Response	250～4,000 Hz, +/-3dB reference to 1K Hz	
	Distortion	1% Max. THD @ 1,000 Hz, 12W	
	Input Impedance	50,000Ω, nominal	
	Output Impedance	8/16Ω	
	Output Adjustment	Speaker volume can be adjusted via front panel	
Handset	Material	ABS	
	Microphone	10Ω; noise-cancelling, dynamic	
	Receiver	150Ω; high-efficiency, dynamic	
	Cord	6 conductors retractile, 5-foot extended, PVC	
	Control	Page push button	
Environment	IP Degree	IP66	
	Ambient Temperature	-30℃～+70℃	
Packing	Dimensions	570(L) x 360(W) x 310(H) mm	
	Weight	14.3 kg	

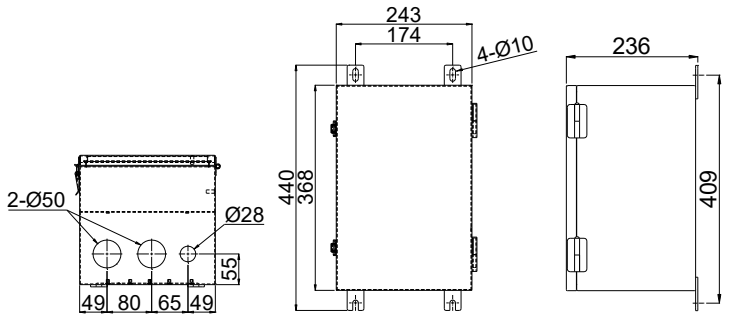

Bottom View　　Front View　　Right View

K35D40 / K31D40　　Unit: mm

MODEL

K35D60

Intelligent Weather-proof
Outdoor Wall Mount Handset Station

Characteristics

K35D60 K31D60

- ABS enclosure, corrosion-resistant, impact-resistant, IP66 rated
- Stainless steel anti-loose screws
- 20 watt amplifier
- Single or five party lines for intercommunication
- Dual color LED light for power-on and off-hook
- Overload protection with current limiting and thermal shutdown circuits
- Modular PCB
- Fuse protection for power supply and speaker amplifier
- Surge protection for power supply
- Hook with magnetic reed switch
- Dynamic microphone for noise cancelling and feedback preventing
- Available for 110Vac or 220Vac
- Adjustable speaker volume from the front panel
- Mute setting of speaker
- With power supply and speaker amplifier
- Address setting, automatically adjusting speaker volume by measuring ambient noise
- Two DI & DO for control
- Pre-broadcast tone and self-detection sound of speaker
- Cable entry holes - Ø50x2 (suitable for 1 1/2″) or Ø35x2 (suitable for 1″), Ø28x1 (suitable for 3/4″)
- K35D60 - Outdoor Five Party Wall Mount Handset Station
- K31D60 - Outdoor Single Party Wall Mount Handset Station

MODEL

K35D60

Specifications

	Model	K35D60	K31D60
	Party Line	Five Party	Single Party
Power	Voltage	110/220 Vac, 50/60 Hz	
	Power Consumption	Zero signal: 8.5VA/6.4W, max signal: 40VA/32W	
Handset Amplifier	Output Level	1.5 Vrms nominal into 33Ω load	
	Output Limit	1.5 Vrms nominal	
	Gain Control	56 dB nominal (below limiter level); adjustable from 40 to 63 dB	
	Frequency Response	250 ～ 4,000 Hz. +/-3 dB	
	Distortion	1.5% Max. THD @ 1,000 Hz	
	Control	Microphone gain, receiver volume and side tone adjustment	
Speaker Amplifier	Output	Push-Pull Class B, 12W	
	Gain Control	0.25Vrms, at rated output	
	Frequency Response	250～4,000 Hz, +/-3dB reference to 1K Hz	
	Distortion	1% Max. THD @ 1,000 Hz, 12W	
	Input Impedance	50,000Ω, nominal	
	Output Impedance	8/16Ω	
	Output Adjustment	Speaker volume can be adjusted via front panel	
Handset	Material	ABS	
	Microphone	10Ω; noise-cancelling, dynamic	
	Receiver	150Ω; high-efficiency, dynamic	
	Cord	6 conductors retractile, 5-foot extended, PVC	
	Control	Page push button	
Environment	IP Degree	IP66	
	Ambient Temperature	-30℃～+70℃	
Packing	Dimensions	420(L) x 330(W) x 350(H) mm	
	Weight	8.7 kg	

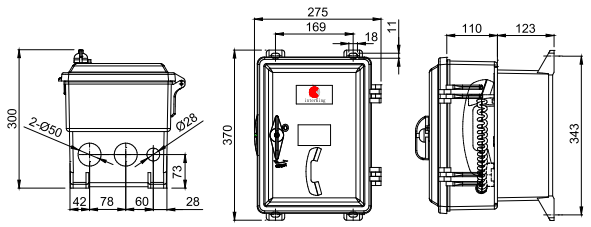

Bottom View　Front View　Right View

K35D60　Unit :mm

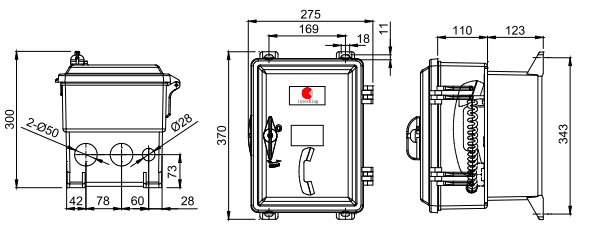

Bottom View　Front View　Right View

K31D60　Unit :mm

MODEL

K35DD0

Intelligent
Industrial Desktop Handset Station

Characteristics

K35DD0

K31DD0

- Steel panel and ABS enclosure, IP54 rated
- Galvanized steel amplifier enclosure, powder coated, corrosion-resistant, impact-resistant
- Special design for control room or office
- 20 watt amplifier
- Single or five party lines for intercommunication
- Dual color LED light for power-on and off-hook
- Built-in speaker and adjustable volume control
- Overload protection with current limiting and thermal shutdown circuits
- Modular PCB
- Fuse protection for power supply and speaker amplifier
- Surge protection for power supply
- Hook with magnetic reed switch
- Dynamic microphone for noise cancelling and feedback preventing
- Available for 110Vac or 220Vac
- Adjustable speaker volume from the front panel
- Mute setting of speaker
- With power supply and speaker amplifier
- Address setting, automatically adjusting speaker volume by measuring ambient noise
- Two DI & DO for control
- Pre-broadcast tone and self-detection sound of speaker
- Cable entry holes - Ø50x2 (suitable for 1 1/2″) or Ø35x2 (suitable for 1″), Ø28x1 (suitable for 3/4″)
- K35DD0 - Desktop Five Party Handset Station
- K31DD0 - Desktop Single Party Handset Station

MODEL

K35DD0

Specifications

	Model	K35DD0	K31DD0
	Party Line	Five Party	Single Party
Power	Voltage	110/220 Vac, 50/60 Hz	
	Power Consumption	Zero signal: 8.5VA/6.4W, max signal: 40VA/32W	
Handset Amplifier	Output Level	1.5 Vrms nominal into 33Ω load	
	Output Limit	1.5 Vrms nominal	
	Gain Control	56 dB nominal (below limiter level); adjustable from 40 to 63 dB	
	Frequency Response	250 ～ 4,000 Hz. +/-3 dB	
	Distortion	1.5% Max. THD @ 1,000 Hz	
	Control	Microphone gain, receiver volume and sidetone adjustment	
Speaker Amplifier	Output	Push-Pull Class B, 12W	
	Gain Control	0.25Vrms, at rated output	
	Frequency Response	250～4,000 Hz, +/-3dB reference to 1K Hz	
	Distortion	1% Max. THD @ 1,000 Hz, 12W	
	Input Impedance	50,000Ω, nominal	
	Output Impedance	8/16Ω	
	Output Adjustment	Speaker volume can be adjusted via front panel	
Handset	Material	ABS	
	Microphone	10Ω; noise-cancelling, dynamic	
	Receiver	150Ω; high-efficiency, dynamic	
	Cord	6 conductors retractile, 5-foot extended, PVC	
	Control	Page push button	
Environment	IP Degree	IP54	
	Ambient Temperature	-30℃～+70℃	
Packing	Dimensions	540(L) x 450(W) x 310(H) mm	
	Weight	12.3 kg	

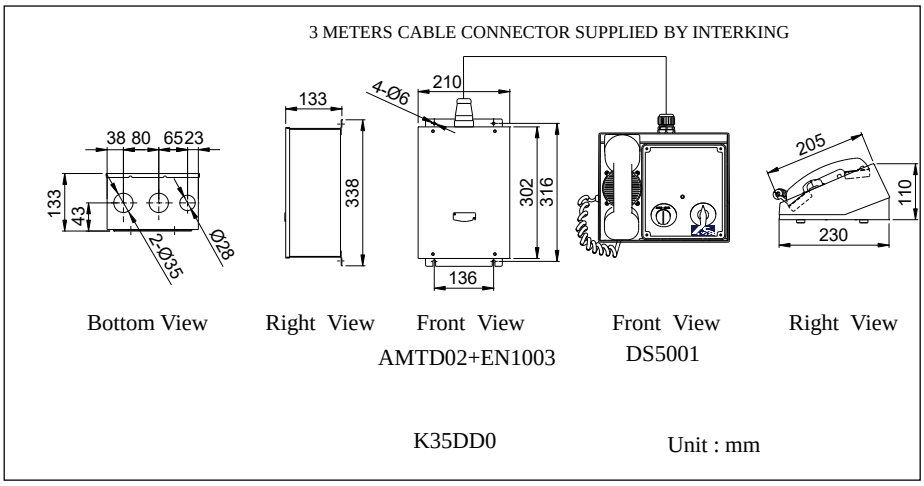

Intelligent
Industrial Desktop Handset Station
(W/ Merge/Isolate Control)

MODEL
K35DDM

Characteristics

K35DDM

K35DDM-M7

K35DDM-M14

- Steel panel and ABS enclosure, IP54 rated
- Galvanized steel amplifier enclosure, powder coated, corrosion-resistant, impact-resistant
- Special design for control room or office, with merge and isolate control function
- 20 watt amplifier
- Five party lines for intercommunication
- Dual color LED light for power-on and off-hook
- Built-in speaker and adjustable volume control
- Overload protection with current limiting and thermal shutdown circuits
- Modular PCB
- Fuse protection for power supply and speaker amplifier
- Surge protection for power supply
- Hook with magnetic reed switch
- Dynamic microphone for noise cancelling and feedback preventing
- Available for 110Vac or 220Vac
- Adjustable speaker volume from the front panel
- Mute setting of speaker
- With power supply and speaker amplifier
- Address setting, automatically adjusting speaker volume by measuring ambient noise
- Two DI & DO for control
- Pre-broadcast tone and self-detection sound of speaker
- Cable entry holes - Ø50x2 (suitable for 1 1/2″) or Ø35x2 (suitable for 1″), Ø28x1 (suitable for 3/4″)
- K35DDM - Desktop Five Party Handset Station (W/ Merge/Isolate 5 Loop Control, 2-wire)
- K35DDM-M7 - Desktop Five Party Handset Station (W/ Merge/Isolate 7 Loop Control, 2-wire)
- K35DDM-M14- Desktop Five Party Handset Station (W/ Merge/Isolate 14 Loop Control, 2-wire)

MODEL

K35DDM

Specifications

Model		K35DDM / K35DDM-M7 / K35DDM-M14
Party Line		Five Party
Power	Voltage	110/220 Vac, 50/60 Hz
	Power Consumption	Zero signal: 8.5VA/6.4W, max signal: 40VA/32W
Handset Amplifier	Output Level	1.5 Vrms nominal into 33Ω load
	Output Limit	1.5 Vrms nominal
	Gain Control	56 dB nominal (below limiter level); adjustable from 40 to 63 dB
	Frequency Response	250 ～ 4,000 Hz. +/-3 dB
	Distortion	1.5% Max. THD @ 1,000 Hz
	Control	Microphone gain, receiver volume and side tone adjustment
Speaker Amplifier	Output	Push-Pull Class B, 12W
	Gain Control	0.25Vrms, at rated output
	Frequency Response	250～4,000 Hz, +/-3dB reference to 1K Hz
	Distortion	1% Max. THD @ 1,000 Hz, 12W
	Input Impedance	50,000Ω, nominal
	Output Impedance	8/16Ω
	Output Adjustment	Speaker volume can be adjusted via front panel
Handset	Material	ABS
	Microphone	10Ω; noise-cancelling, dynamic
	Receiver	150Ω; high-efficiency, dynamic
	Cord	6 conductors retractile, 5-foot extended, PVC
	Control	Page push button
Environment	IP Degree	IP54
	Ambient Temperature	-30℃～+70℃
Packing	Dimensions	540(L) x 450(W) x 310(H) mm
	Weight	13.9 kg

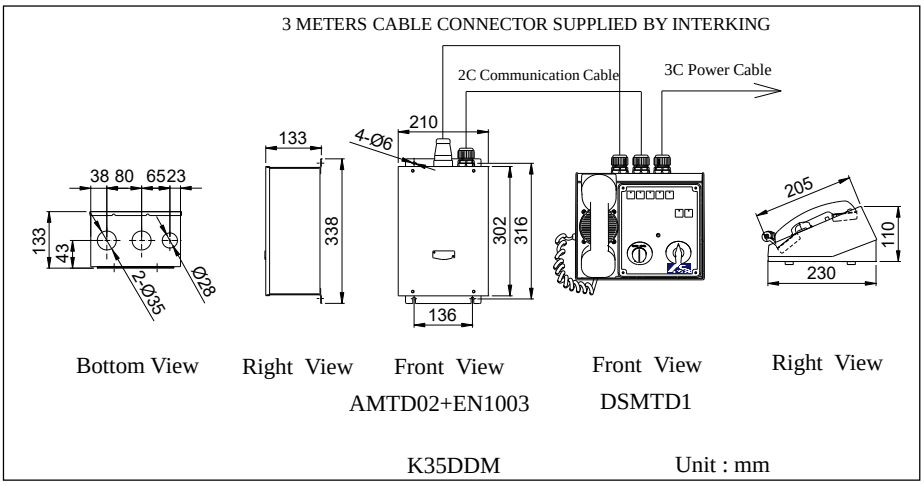

MODEL

K35DF0

Intelligent
Industrial Indoor Flush Mount Handset Station

Characteristics

K35DF0

K31DF0

- Galvanized steel enclosure, powder coated, corrosion-resistant, impact-resistant
- Stainless steel anti-loose screws
- Special design for control room or office
- 20 watt amplifier
- Single or five party lines for intercommunication
- Dual color LED light for power-on and off-hook
- Overload protection with current limiting and thermal shutdown circuits
- Modular PCB
- Fuse protection for power supply and speaker amplifier
- Surge protection for power supply
- Hook with magnetic reed switch
- Dynamic microphone for noise cancelling and feedback preventing
- Available for 110Vac or 220Vac
- Adjustable speaker volume from the front panel
- Mute setting of speaker
- With power supply and speaker amplifier
- Address setting, automatically adjusting speaker volume by measuring ambient noise
- Two DI & DO for control
- Pre-broadcast tone and self-detection sound of speaker
- Cable entry holes - Ø50x2 (suitable for 1 1/2″) or Ø35x2 (suitable for 1″), Ø28x1 (suitable for 3/4″)
- K35DF0 - Indoor Flush Mount Five Party Handset Station
- K31DF0 - Indoor Flush Mount Single Party Handset Station

MODEL

K35DF0

Specifications

	Model	K35DF0	K31DF0
	Party Line	Five Party	Single Party
Power	Voltage	110/220 Vac, 50/60 Hz	
	Power Consumption	Zero signal: 8.5VA/6.4W, max signal: 40VA/32W	
Handset Amplifier	Output Level	1.5 Vrms nominal into 33Ω load	
	Output Limit	1.5 Vrms nominal	
	Gain Control	56 dB nominal (below limiter level); adjustable from 40 to 63 dB	
	Frequency Response	250 ～ 4,000 Hz. +/-3 dB	
	Distortion	1.5% Max. THD @ 1,000 Hz	
	Control	Microphone gain, receiver volume and side tone adjustment	
Speaker Amplifier	Output	Push-Pull Class B, 12W	
	Gain Control	0.25Vrms, at rated output	
	Frequency Response	250～4,000 Hz, +/-3dB reference to 1K Hz	
	Distortion	1% Max. THD @ 1,000 Hz, 12W	
	Input Impedance	50,000Ω, nominal	
	Output Impedance	8/16Ω	
	Output Adjustment	Speaker volume can be adjusted via front panel	
Handset	Material	ABS	
	Microphone	10Ω; noise-cancelling, dynamic	
	Receiver	150Ω; high-efficiency, dynamic	
	Cord	6 conductors retractile, 5-foot extended, PVC	
	Control	Page push button	
Environment	Ambient Temperature	-30℃～+70℃	
Packing	Dimensions	410(L) x 320(W) x 330(H) mm	
	Weight	9.8 kg	

3 METER CABLE CONNECTOR SUPPLIED INTERKING

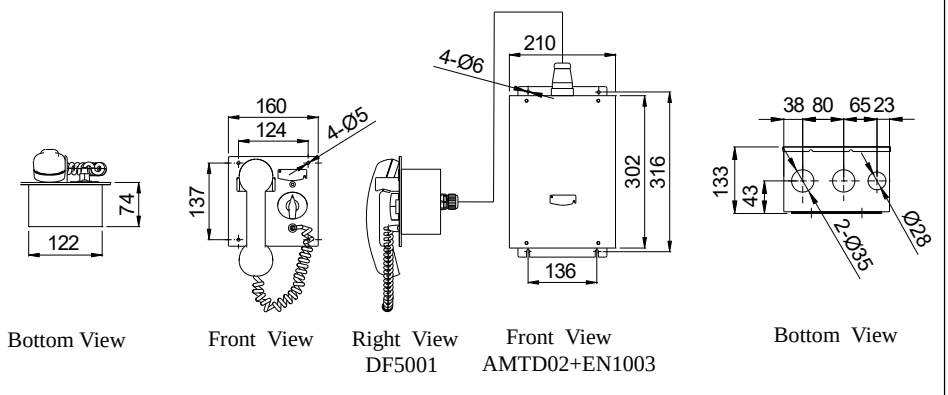

K35DF0 Unit : mm

MODEL

K35DS0

Intelligent
Industrial Indoor Side Mount Handset Station

Characteristics

K35DS0

K31DS0

- Galvanized steel enclosure, powder coated, corrosion-resistant, impact-resistant
- Stainless steel anti-loose screws
- Special design for control room or office
- 20 watt amplifier
- Single or five party lines for intercommunication
- Dual color LED light for power-on and off-hook
- Overload protection with current limiting and thermal shutdown circuits
- Modular PCB
- Fuse protection for power supply and speaker amplifier
- Surge protection for power supply
- Hook with magnetic reed switch
- Dynamic microphone for noise cancelling and feedback preventing
- Available for 110Vac or 220Vac
- Adjustable speaker volume from the front panel
- Mute setting of speaker
- With power supply and speaker amplifier
- Address setting, automatically adjusting speaker volume by measuring ambient noise
- Two DI & DO for control
- Pre-broadcast tone and self-detection sound of speaker
- Cable entry holes - Ø50x2 (suitable for 1 1/2″) or Ø35x2 (suitable for 1″), Ø28x1 (suitable for 3/4″)
- K35DS0 - Indoor Side Mount Five Party Handset Station
- K31DS0 - Indoor Side Mount Single Party Handset Station

MODEL

K35DS0

Specifications

	Model	K35DS0	K31DS0
	Party Line	Five Party	Single Party
Power	Voltage	110/220 Vac, 50/60 Hz	
	Power Consumption	Zero signal: 8.5VA/6.4W, max signal: 40VA/32W	
Handset Amplifier	Output Level	1.5 Vrms nominal into 33Ω load	
	Output Limit	1.5 Vrms nominal	
	Gain Control	56 dB nominal (below limiter level); adjustable from 40 to 63 dB	
	Frequency Response	250 ～ 4,000 Hz. +/-3 dB	
	Distortion	1.5% Max. THD @ 1,000 Hz	
	Control	Microphone gain, receiver volume and side tone adjustment	
Speaker Amplifier	Output	Push-Pull Class B, 12W	
	Gain Control	0.25Vrms, at rated output	
	Frequency Response	250～4,000 Hz, +/-3dB reference to 1K Hz	
	Distortion	1% Max. THD @ 1,000 Hz, 12W	
	Input Impedance	50,000Ω, nominal	
	Output Impedance	8/16Ω	
	Output Adjustment	Speaker volume can be adjusted via front panel	
Handset	Material	ABS	
	Microphone	10Ω; noise-cancelling, dynamic	
	Receiver	150Ω; high-efficiency, dynamic	
	Cord	6 conductors retractile, 5-foot extended, PVC	
	Control	Page push button	
Environment	Ambient Temperature	-30℃～+70℃	
Packing	Dimensions	410(L) x 307(W) x 320(H) mm	
	Weight	9.8 kg	

3 METER CABLE CONNECTOR SUPPLIED INTERKING

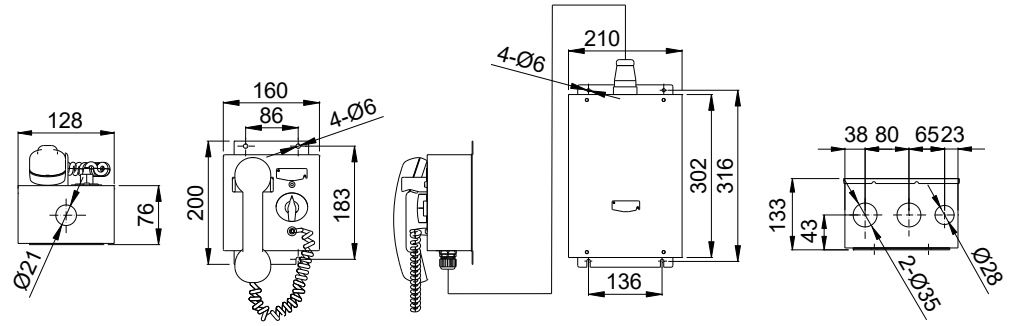

Bottom View | Front View | Right View DS5002 | Front View AMTD02+EN1003 | Bottom View

K35DS0 Unit : mm

MODEL

K35DP0

Intelligent
Industrial Portable Handset Station

Characteristics

K35DP0

- Galvanized steel enclosure, powder coated, corrosion-resistant, impact-resistant
- Stainless steel anti-loose screws
- Portable design
- 20 watt amplifier
- Dual color LED light for power-on and off-hook
- Built-in speaker and adjustable volume control
- Overload protection with current limiting and thermal shutdown circuits
- Modular PCB
- Fuse protection for power supply and speaker amplifier
- Surge protection for power supply
- Hook with magnetic reed switch
- Dynamic microphone for noise cancelling and feedback preventing
- Available for 110Vac or 220Vac
- Adjustable speaker volume from the front panel
- Mute setting of speaker
- With power supply and speaker amplifier
- Pre-broadcast tone and self-detection sound of speaker
- Must be used with JB024-P to supply power for five party communication.

MODEL

K35DP0

Specifications

Model		K35DP0
Party Line		Five Party(Must be connected with JB024-P)
Power	Voltage	110/220 Vac, 50/60 Hz
	Power Consumption	Zero signal: 8.5VA/6.4W, max signal: 40VA/32W
Handset Amplifier	Output Level	1.5 Vrms nominal into 33Ω load
	Output Limit	1.5 Vrms nominal
	Gain Control	56 dB nominal (below limiter level); adjustable from 40 to 63 dB
	Frequency Response	250 ～ 4,000 Hz. +/-3 dB
	Distortion	1.5% Max. THD @ 1,000 Hz
	Control	Microphone gain, receiver volume and side tone adjustment
Speaker Amplifier	Output	Push-Pull Class B, 12W
	Gain Control	0.25Vrms, at rated output
	Frequency Response	250～4,000 Hz, +/-3dB reference to 1K Hz
	Distortion	1% Max. THD @ 1,000 Hz, 12W
	Input Impedance	50,000Ω, nominal
	Output Impedance	8/16Ω
	Output Adjustment	Speaker volume can be adjusted via front panel
Handset	Material	ABS
	Microphone	10Ω; noise-cancelling, dynamic
	Receiver	150Ω; high-efficiency, dynamic
	Cord	6 conductors retractile, 5-foot extended, PVC
	Control	Page push button
Environment	Ambient Temperature	-30℃～+70℃
Packing	Dimensions	520(L) x 325(W) x 365(H) mm
	Weight	10.1 kg

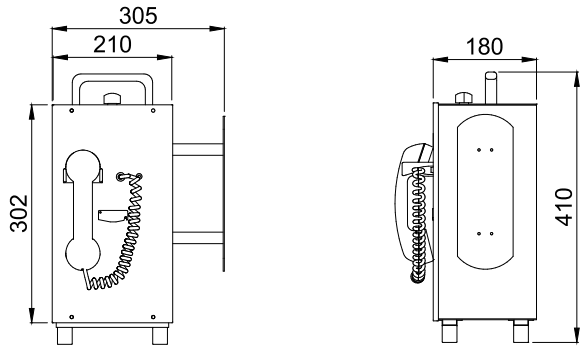

Front View　　Right View

K35DP0　　Unit : mm

MODEL

K3ADG0

Intelligent
Industrial Indoor Wall Mount Amplifier Station

Characteristics

K3ADG0

- Galvanized steel enclosure, powder coated, corrosion-resistant, IP54 rated
- Stainless steel anti-loose screws
- 20 watt amplifier
- Power LED light
- Overload protection with current limiting and thermal shutdown circuits
- Modular PCB
- Fuse protection for power supply and speaker amplifier
- Surge protection for power supply
- Available for 110Vac or 220Vac
- Adjustable speaker volume from the front panel
- With power supply and speaker amplifier
- Address setting, automatically adjusting speaker volume by measuring ambient noise
- Two DI & DO for control
- Cable entry holes - Ø50x2 (suitable for 1 1/2″) or Ø35x2 (suitable for 1″),Ø28x1 (suitable for 3/4″)

MODEL

K3ADG0

Specifications

Model		K3ADG0
Party Line		None
Power	Voltage	110/220 Vac, 50/60 Hz
	Power Consumption	Zero signal: 8.5VA/6.4W, max signal: 40VA/32W
Speaker Amplifier	Output	Push-Pull Class B, 12W
	Gain Control	0.25Vrms, at rated output
	Frequency Response	250～4,000 Hz, +/-3dB reference to 1K Hz
	Distortion	1% Max. THD @ 1,000 Hz, 12W
	Input Impedance	50,000Ω, nominal
	Output Impedance	8/16Ω
	Output Adjustment	Speaker volume can be adjusted via front panel
Environment	Ambient Temperature	-30℃～+50℃
Packing	Dimensions	410(L) x 270(W) x 720(H) mm
	Weight	7.5kg

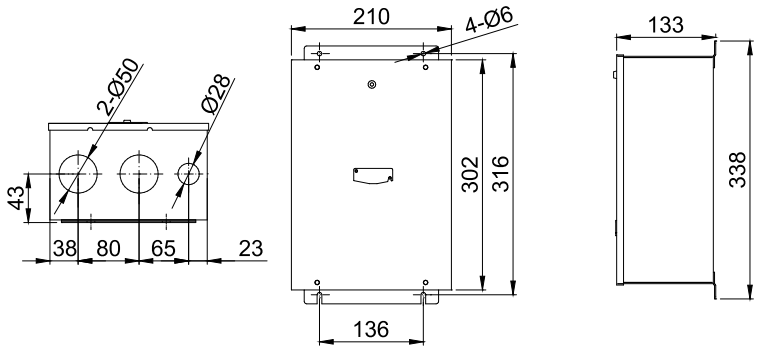

Bottom View　　Front View　　Right View

K3ADG0　　Unit : mm

MODEL

K3AD40

Intelligent Weather-proof
Outdoor Wall Mount Amplifier Station

Characteristics

K3AD40

- Stainless steel enclosure, corrosion-resistant, impact-resistant, IP66 rated
- Stainless steel anti-loose screws
- 20 watt amplifier
- Power LED light
- Overload protection with current limiting and thermal shutdown circuits
- Modular PCB
- Fuse protection for power supply and speaker amplifier
- Surge protection for power supply
- Available for 110Vac or 220Vac
- Adjustable speaker volume from the front panel
- With power supply and speaker amplifier
- Address setting, automatically adjusting speaker volume by measuring ambient noise
- Two DI & DO for control
- Cable entry holes - Ø50x2 (suitable for 1 1/2″) or Ø35x2 (suitable for 1″),Ø28x1 (suitable for 3/4″)

MODEL

K3AD40

Specifications

Model		K3AD40
Party Line		None
Power	Voltage	110/220 Vac, 50/60 Hz
	Power Consumption	Zero signal: 8.5VA/6.4W, max signal: 40VA/32W
Speaker Amplifier	Output	Push-Pull Class B, 12W
	Gain Control	0.25Vrms, at rated output
	Frequency Response	250～4,000 Hz, +/-3dB reference to 1K Hz
	Distortion	1% Max. THD @ 1,000 Hz, 12W
	Input Impedance	50,000Ω, nominal
	Output Impedance	8/16Ω
	Output Adjustment	Speaker volume can be adjusted via front panel
Environment	IP Degree	IP66
	Ambient Temperature	-20℃～+50℃
Packing	Dimensions	570(L) x 360(W) x 310(H) mm
	Weight	13.9 kg

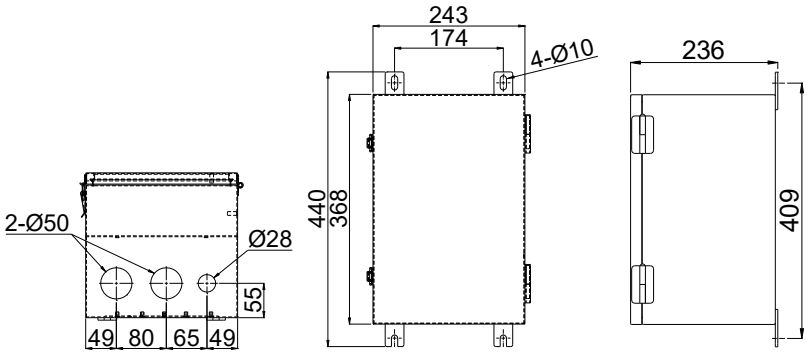

Bottom View　　Front View　　Right View

K3AD40　　Unit: mm

MODEL

K3AD60

Intelligent Weather-proof
Outdoor Wall Mount Amplifier Station

Characteristics

K3AD60

- ABS enclosure, corrosion-resistant, impact-resistant, IP66 rated
- Stainless steel anti-loose screws
- 20 watt amplifier
- Power LED light
- Overload protection with current limiting and thermal shutdown circuits
- Modular PCB
- Fuse protection for power supply and speaker amplifier
- Surge protection for power supply
- Available for 110Vac or 220Vac
- Adjustable speaker volume from the front panel
- With power supply and speaker amplifier
- Address setting, automatically adjusting speaker volume by measuring ambient noise
- Two DI & DO for control
- Cable entry holes - Ø50x2 (suitable for 1 1/2″) or Ø35x2 (suitable for 1″), Ø28x1 (suitable for 3/4″)

MODEL

K3AD60

Specifications

Model		K3AD60
Party Line		None
Power	Voltage	110/220 Vac, 50/60 Hz
	Power Consumption	Zero signal: 8.5VA/6.4W, max signal: 40VA/32W
Speaker Amplifier	Output	Push-Pull Class B, 12W
	Gain Control	0.25Vrms, at rated output
	Frequency Response	250～4,000 Hz, +/-3dB reference to 1K Hz
	Distortion	1% Max. THD @ 1,000 Hz, 12W
	Input Impedance	50,000Ω, nominal
	Output Impedance	8/16Ω
	Output Adjustment	Speaker volume can be adjusted via front panel
Environment	IP Degree	IP66
	Ambient Temperature	-20℃～+50℃
Packing	Dimensions	420(L) x 330(W) x 350(H) mm
	Weight	8.1 kg

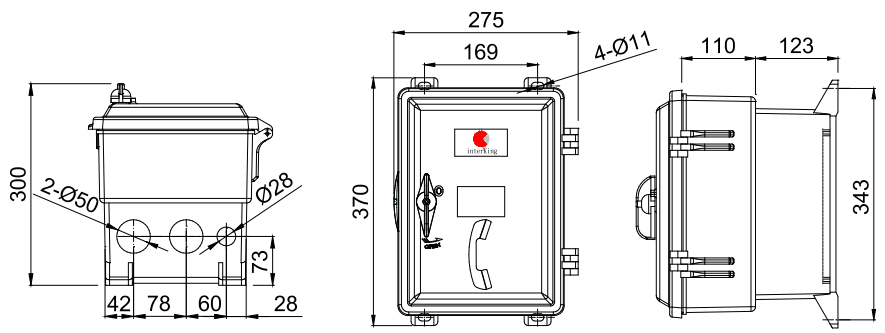

Bottom View　　Front View　　Right View

K3AD60　　Unit : mm

MODEL

K25DG0

Intelligent Explosion-proof Indoor Wall Mount Handset Station

Characteristics

K25DG0

K21DG0

- Galvanized steel enclosure, powder coated, corrosion-resistant, IP54 rated
- Stainless steel anti-loose screws
- 20 watt amplifier
- Single or five party lines for intercommunication
- Dual color LED light for power-on and off-hook
- Overload protection with current limiting and thermal shutdown circuits
- Modular PCB
- Fuse protection for power supply and speaker amplifier
- Surge protection for power supply
- Hook with magnetic reed switch
- Dynamic microphone for noise cancelling and feedback preventing
- Available for 110Vac or 220Vac
- Adjustable speaker volume from the front panel
- Mute setting of speaker
- With power supply and speaker amplifier
- Address setting, automatically adjusting speaker volume by measuring ambient noise
- Two DI & DO for control
- Pre-broadcast tone and self-detection sound of speaker
- CNS certified, Ex ec nC IIC T6 Gc / Ex tc IIIB T85°C Dc
- CQST certified, Ex ec ib IIC T6 Gc / Ex tc ib IIIB T80°C Dc
- UL certified, Class I, Division 2, Groups A, B, C and D; Class II, Division 2, Groups F and G; Class III, Division 2 Type 12
- Cable entry holes - Ø50x2 (suitable for 1 1/2″) or Ø35x2 (suitable for 1″), Ø28x1 (suitable for 3/4″)
- K25DG0 - Indoor Five Party Wall Mount Handset Station
- K21DG0 - Indoor Single Party Wall Mount Handset Station

MODEL

K25DG0

Specifications

	Model	K25DG0	K21DG0
	Party Line	Five Party	Single Party
Power	Voltage	110/220 Vac, 50/60 Hz	
	Power Consumption	Zero signal: 8.5VA/6.4W, max signal: 40VA/32W	
Handset Amplifier	Output Level	1.5 Vrms nominal into 33Ω load	
	Output Limit	1.5 Vrms nominal	
	Gain Control	56 dB nominal (below limiter level); adjustable from 40 to 63 dB	
	Frequency Response	250 ～ 4,000 Hz. +/-3 dB	
	Distortion	1.5% Max. THD @ 1,000 Hz	
	Control	Microphone gain, receiver volume and sidetone adjustment	
Speaker Amplifier	Output	Push-Pull Class B, 12W	
	Gain Control	0.25Vrms, at rated output	
	Frequency Response	250～4,000 Hz, +/-3dB reference to 1K Hz	
	Distortion	1% Max. THD @ 1,000 Hz, 12W	
	Input Impedance	50,000Ω, nominal	
	Output Impedance	8/16Ω	
	Output Adjustment	Speaker volume can be adjusted via front panel	
Handset	Material	ABS	
	Microphone	10Ω; noise-cancelling, dynamic	
	Receiver	150Ω; high-efficiency, dynamic	
	Cord	6 conductors retractile, 5-foot extended, PVC	
	Control	Page push button	
Environment	IP Degree	IP54	
	Certification	CNS: Ex ec nC IIC T6 Gc / Ex tc IIIB T85°C Dc CQST: Ex ec ib IIC T6 Gc / Ex tc ib IIIB T80°C Dc UL: Class I, Division 2, Groups A, B, C and D; Class II, Division 2, Groups F and G; Class III, Division 2 Type 12	
	Ambient Temperature	-20°C～+50°C	
Packing	Dimensions	410(L) x 270(W) x 270(H) mm	
	Weight	7.9 kg	

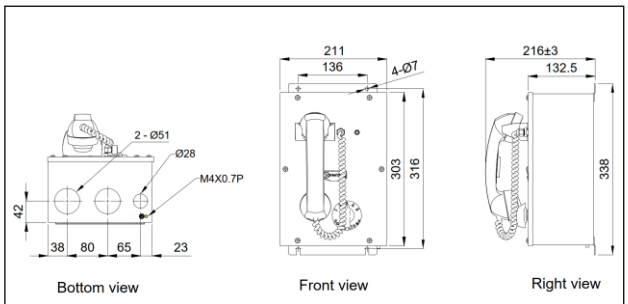

K25DG0 Unit:mm

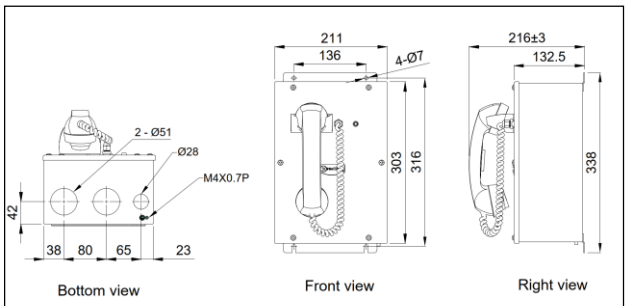

K21DG0 Unit:mm

MODEL

K25D40

Intelligent Explosion-proof Outdoor Wall Mount Handset Station

Characteristics

K25D40

K21D40

- Stainless steel enclosure, corrosion-resistant, impact-resistant, IP66 rated
- Stainless steel anti-loose screws
- 20 watt amplifier
- Single or five party lines for intercommunication
- Dual color LED light for power-on and off-hook
- Overload protection with current limiting and thermal shutdown circuits
- Modular PCB
- Fuse protection for power supply and speaker amplifier
- Surge protection for power supply
- Hook with magnetic reed switch
- Dynamic microphone for noise cancelling and feedback preventing
- Available for 110Vac or 220Vac
- Adjustable speaker volume from the front panel
- Mute setting of speaker
- With power supply and speaker amplifier
- Address setting, automatically adjusting speaker volume by measuring ambient noise
- Two DI & DO for control
- Pre-broadcast tone and self-detection sound of speaker
- CNS certified, Ex nC IIC T6 Gc / Ex tc IIIB T85°C Dc
- UL certified, Class I, Division 2, Groups A, B, C and D; Class II, Division 2, Groups F and G; Class III, Division 2 Type 4X
- Cable entry holes - Ø50x2 (suitable for 1 1/2″) or Ø35x2 (suitable for 1″), Ø28x1 (suitable for 3/4″)
- K25D40 - Outdoor Five Party Wall Mount Handset Station
- K21D40 - Outdoor Single Party Wall Mount Handset Station

MODEL

K25D40

Specifications

	Model	K25D40	K21D40
	Party Line	Five Party	Single Party
Power	Voltage	110/220 Vac, 50/60 Hz	
	Power Consumption	Zero signal: 8.5VA/6.4W, max signal: 40VA/32W	
Handset Amplifier	Output Level	1.5 Vrms nominal into 33Ω load	
	Output Limit	1.5 Vrms nominal	
	Gain Control	56 dB nominal (below limiter level); adjustable from 40 to 63 dB	
	Frequency Response	250 ～ 4,000 Hz. +/-3 dB	
	Distortion	1.5% Max. THD @ 1,000 Hz	
	Control	Microphone gain, receiver volume and side tone adjustment	
Speaker Amplifier	Output	Push-Pull Class B, 12W	
	Gain Control	0.25Vrms, at rated output	
	Frequency Response	250～4,000 Hz, +/-3dB reference to 1K Hz	
	Distortion	1% Max. THD @ 1,000 Hz, 12W	
	Input Impedance	50,000Ω, nominal	
	Output Impedance	8/16Ω	
	Output Adjustment	Speaker volume can be adjusted via front panel	
Handset	Material	ABS	
	Microphone	10Ω; noise-cancelling, dynamic	
	Receiver	150Ω; high-efficiency, dynamic	
	Cord	6 conductors retractile, 5-foot extended, PVC	
	Control	Page push button	
Environment	IP Degree	IP66	
	Certification	CNS: Ex nC IIC T6 Gc / Ex tc IIIB T85°C Dc UL: Class I, Division 2, Groups A, B, C and D; Class II, Division 2, Groups F and G; Class III, Division 2 Type 4X	
	Ambient Temperature	-20°C～+50°C	
Packing	Dimensions	570(L) x 360(W) x 310(H) mm	
	Weight	14.3 kg	

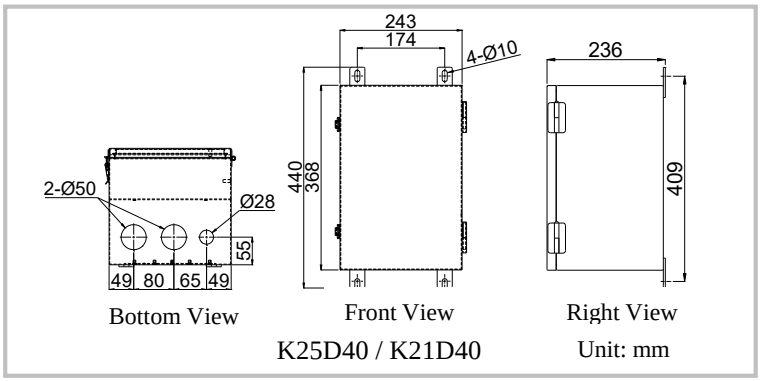

MODEL

K25D60

Intelligent Explosion-proof Outdoor Wall Mount Handset Station

Characteristics

K25D60

K21D60

- ABS enclosure, corrosion-resistant, impact-resistant, IP66 rated
- Stainless steel anti-loose screws
- 20 watt amplifier
- Single or five party lines for intercommunication
- Dual color LED light for power-on and off-hook
- Overload protection with current limiting and thermal shutdown circuits
- Modular PCB
- Fuse protection for power supply and speaker amplifier
- Surge protection for power supply
- Hook with magnetic reed switch
- Dynamic microphone for noise cancelling and feedback preventing
- Available for 110Vac or 220Vac
- Adjustable speaker volume from the front panel
- Mute setting of speaker
- With power supply and speaker amplifier
- Address setting, automatically adjusting speaker volume by measuring ambient noise
- Two DI & DO for control
- Pre-broadcast tone and self-detection sound of speaker
- CNS certified, Ex nC IIC T6 Gc / Ex tc IIIB T85°C Dc
- CQST certified, Ex ec ic IIC T6 Gc / Ex tc ib IIIC T80°C Dc
- Cable entry holes - Ø50x2 (suitable for 1 1/2″) or Ø35x2 (suitable for 1″), Ø28x1 (suitable for 3/4″)
- K25D60 - Outdoor Five Party Wall Mount Handset Station
- K21D60 - Outdoor Single Party Wall Mount Handset Station

MODEL

K25D60

Specifications

	Model	K25D60	K21D60
	Party Line	Five Party	Single Party
Power	Voltage	110/220 Vac, 50/60 Hz	
	Power Consumption	Zero signal: 8.5VA/6.4W, max signal: 40VA/32W	
Handset Amplifier	Output Level	1.5 Vrms nominal into 33Ω load	
	Output Limiter	1.5 Vrms nominal	
	Gain Control	56 dB nominal (below limiter level); adjustable from 40 to 63 dB	
	Frequency Response	250 ～ 4,000 Hz. +/-3 dB	
	Distortion	1.5% Max. THD @ 1,000 Hz	
	Control	Microphone gain, receiver volume and sidetone adjustment	
Speaker Amplifier	Output	Push-Pull Class B, 12W	
	Gain Control	0.25 Vrms, at rated output	
	Frequency Response	250～4,000 Hz, +/-3dB reference to 1K Hz	
	Distortion	1% Max. THD @ 1,000 Hz, 12W	
	Input Impedance	50,000Ω, nominal	
	Output Impedance	8/16Ω	
	Output Adjustment	Speaker volume can be adjusted via front panel	
Handset	Material	ABS	
	Microphone	10Ω; noise-cancelling, dynamic	
	Receiver	150Ω; high-efficiency, dynamic	
	Cord	6 conductors retractile, 5-foot extended, PVC	
	Control	Page push button	
Environment	IP Degree	IP66	
	Certification	CNS: Ex nC IIC T6 Gc / Ex tc IIIB T85°C Dc CQST: Ex ec ic IIC T6 Gc / Ex tc ib IIIC T80°C Dc	
	Ambient Temperature	-20°C～+50°C	
Packing	Dimensions	420(L) x 330(W) x 350(H) mm	
	Weight	8.7 kg	

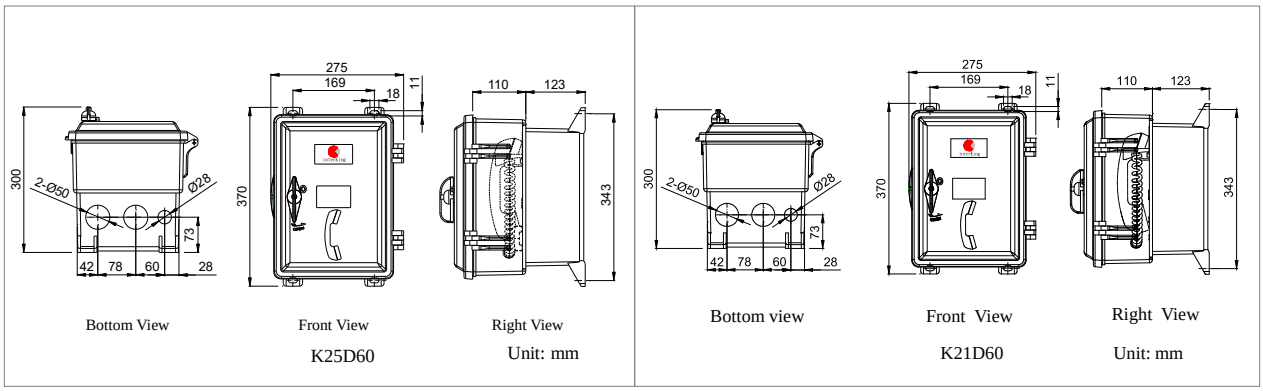

INTERKING ENTERPRISES LTD.
http://www.interking.com.tw
interKing

MODEL

K25DD0

Intelligent Explosion-proof Desktop Handset Station

Characteristics

K25DD0

K21DD0

- Steel panel and ABS enclosure, IP54 rated
- Galvanized steel amplifier enclosure, powder coated, corrosion-resistant, impact-resistant
- Special design for control room or office
- 20 watt amplifier
- Single or five party lines for intercommunication
- Dual color LED light for power-on and off-hook
- Built-in speaker and adjustable volume control
- Overload protection with current limiting and thermal shutdown circuits
- Modular PCB
- Fuse protection for power supply and speaker amplifier
- Surge protection for power supply
- Hook with magnetic reed switch
- Dynamic microphone for noise cancelling and feedback preventing
- Available for 110Vac or 220Vac
- Adjustable speaker volume from the front pane
- Mute setting of speaker
- With power supply and speaker amplifier
- Address setting, automatically adjusting speaker volume by measuring ambient noise
- Two DI & DO for control
- Pre-broadcast tone and self-detection sound of speaker
- CNS certified, Ex ec nC IIC T6 Gc
- Cable entry holes - Ø50x2 (suitable for 1 1/2″) or Ø35x2 (suitable for 1″), Ø28x1 (suitable for 3/4″)
- K25DD0 - Desktop Five Party Handset Station
- K21DD0 - Desktop Single Party Handset Station

MODEL

K25DD0

Specifications

	Model	K25DD0	K21DD0
	Party Line	Five Party	Single Party
Power	Voltage	110/220 Vac, 50/60 Hz	
	Power Consumption	Zero signal: 8.5VA/6.4W, max signal: 40VA/32W	
Handset Amplifier	Output Level	1.5 Vrms nominal into 33Ω load	
	Output Limit	1.5 Vrms nominal	
	Gain Control	56 dB nominal (below limiter level); adjustable from 40 to 63 dB	
	Frequency Response	250 ～ 4,000 Hz. +/-3 dB	
	Distortion	1.5% Max. THD @ 1,000 Hz	
	Control	Microphone gain, receiver volume and side tone adjustment	
Speaker Amplifier	Output	Push-Pull Class B, 12W	
	Gain Control	0.25Vrms, at rated output	
	Frequency Response	250～4,000 Hz, +/-3dB reference to 1K Hz	
	Distortion	1% Max. THD @ 1,000 Hz, 12W	
	Input Impedance	50,000Ω, nominal	
	Output Impedance	8/16Ω	
	Output Adjustment	Speaker volume can be adjusted via front panel	
Handset	Material	ABS	
	Microphone	10Ω; noise-cancelling, dynamic	
	Receiver	150Ω; high-efficiency, dynamic	
	Cord	6 conductors retractile, 5-foot extended, PVC	
	Control	Page push button	
Environment	Certification	CNS: Ex ec nC IIC T6 Gc	
	Ambient Temperature	-20℃～+40℃	
Packing	Dimensions	540(L) x 450(W) x 310(H) mm	
	Weight	12.3 kg	

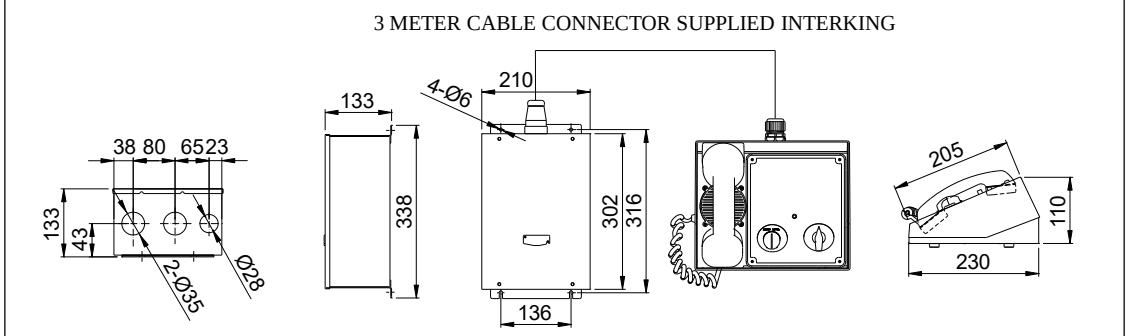

Bottom View | Right View | Front View AMTD02+EN1003 | Front View DS5001 | Right View

K25DD0

Unit : mm

MODEL

K2ADG0

Intelligent Explosion-proof Indoor Wall Mount Amplifier Station

Characteristics

K2ADG0

- Galvanized steel enclosure, powder coated, corrosion-resistant, impact-resistant, IP54 rated
- Stainless steel anti-loose screws
- 20 watt amplifier
- Power LED light
- Overload protection with current limiting and thermal shutdown circuits
- Modular PCB
- Fuse protection for power supply and speaker amplifier
- Surge protection for power supply
- Available for 110Vac or 220Vac
- Adjustable speaker volume from the front panel
- With power supply and speaker amplifier
- Address setting, automatically adjusting speaker volume by measuring ambient noise
- Two DI & DO for control
- CNS certified, Ex ec nC IIC T6 Gc / Ex tc IIIB T85°C Dc
- CQST certified, Ex ec ib IIC T6 Gc / Ex tc ib IIIB T80°C Dc
- UL certified, Class I, Division 2, Groups A, B, C and D; Class II, Division 2, Groups F and G; Class III, Division 2 Type 12
- Cable entry holes - Ø50x2 (suitable for 1 1/2″) or Ø35x2 (suitable for 1″), Ø28x1 (suitable for 3/4″)

MODEL

K2ADG0

Specifications

Model		K2ADG0
Party Line		None
Power	Voltage	110/220 Vac, 50/60 Hz
	Power Consumption	Zero signal: 8.5VA/6.4W, max signal: 40VA/32W
Speaker Amplifier	Output	Push-Pull Class B, 12W
	Gain Control	0.25Vrms, at rated output
	Frequency Response	250～4,000 Hz, +/-3dB reference to 1K Hz
	Distortion	1% Max. THD @ 1,000 Hz, 12W
	Input Impedance	50,000Ω, nominal
	Output Impedance	8/16Ω
	Output Adjustment	Speaker volume can be adjusted via front panel
Environment	IP Degree	IP54
	Certification	CNS: Ex ec nC IIC T6 Gc / Ex tc IIIB T85°C Dc CQST: Ex ec ib IIC T6 Gc / Ex tc ib IIIB T80°C Dc UL: Class I, Division 2, Groups A, B, C and D; Class II, Division 2, Groups F and G; Class III, Division 2 Type 12
	Ambient Temperature	-20°C～+50°C
Packing	Dimensions	410(L) x 270(W) x 270(H) mm
	Weight	7.5 kg

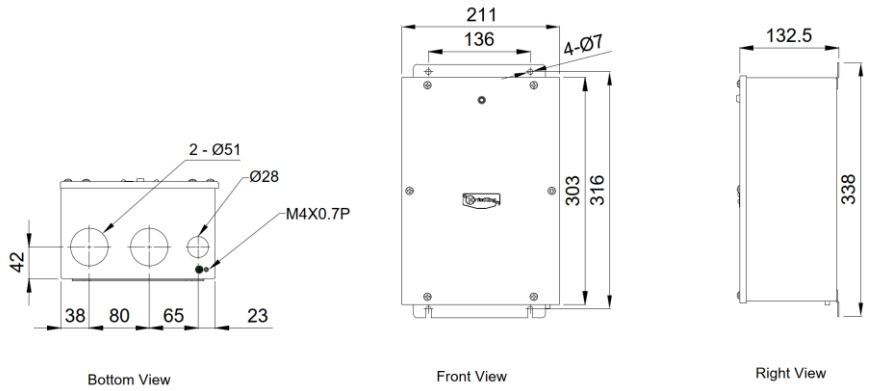

K2ADG0 Unit:mm

MODEL

K2AD40

Intelligent Explosion-proof Outdoor Wall Mount Amplifier Station

Characteristics

K2AD40

- Stainless steel enclosure, corrosion-resistant, impact-resistant, IP66 rated
- Stainless steel anti-loose screws
- 20 watt amplifier
- Power LED light
- Overload protection with current limiting and thermal shutdown circuits
- Modular PCB
- Fuse protection for power supply and speaker amplifier
- Surge protection for power supply
- Available for 110Vac or 220Vac
- Adjustable speaker volume from the front panel
- With power supply and speaker amplifier
- Address setting, automatically adjusting speaker volume by measuring ambient noise
- Two DI & DO for control
- CNS certified, Ex nC IIC T6 Gc / Ex tc IIIB T85°C Dc
- UL certified, Class I, Division 2, Groups A, B, C and D; Class II, Division 2, Groups F and G; Class III, Division 2 Type 4X
- Cable entry holes - Ø50x2 (suitable for 1 1/2″) or Ø35x2 (suitable for 1″),Ø28x1 (suitable for 3/4″)

MODEL

K2AD40

Specifications

Model		K2AD40
Party Line		None
Power	Voltage	110/220 Vac, 50/60 Hz
	Power Consumption	Zero signal: 8.5VA/6.4W, max signal: 40VA/32W
Speaker Amplifier	Output	Push-Pull Class B, 12W
	Gain Control	0.25Vrms, at rated output
	Frequency Response	250～4,000 Hz, +/-3dB reference to 1K Hz
	Distortion	1% Max. THD @ 1,000 Hz, 12W
	Input Impedance	50,000Ω, nominal
	Output Impedance	8/16Ω
	Output Adjustment	Speaker volume can be adjusted via front panel
Environment	IP Degree	IP66
	Certification	CNS: Ex nC IIC T6 Gc / Ex tc IIIB T85°C Dc UL: Class I, Division 2, Groups A, B, C and D; Class II, Division 2, Groups F and G; Class III, Division 2 Type 4X
	Ambient Temperature	-20°C～+50°C
Packing	Dimensions	570(L) x 360(W) x 310(H) mm
	Weight	13.9 kg

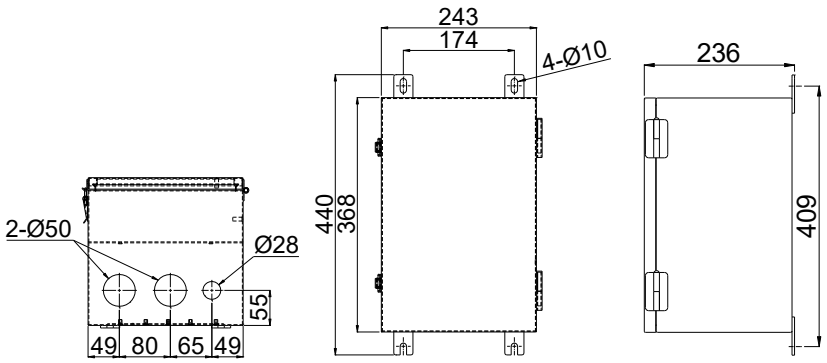

Bottom View | Front View | Right View

K2AD40 | Unit: mm

MODEL

K2AD60

Intelligent Explosion-proof Outdoor Wall Mount Amplifier Station

Characteristics

K2AD60

- ABS enclosure, corrosion-resistant, impact-resistant, IP66 rated
- Stainless steel anti-loose screws
- 20 watt amplifier
- Power LED light
- Overload protection with current limiting and thermal shutdown circuits
- Modular PCB
- Fuse protection for power supply and speaker amplifier
- Surge protection for power supply
- Available for 110Vac or 220Vac
- Adjustable speaker volume from the front panel
- With power supply and speaker amplifier
- Address setting, automatically adjusting speaker volume by measuring ambient noise
- Two DI & DO for control
- CNS certified, Ex nC IIC T6 Gc / Ex tc IIIB T85°C Dc
- CQST certified, Ex ec ic IIC T6 Gc / Ex tc ib IIIC T80°C Dc
- Cable entry holes - Ø50x2 (suitable for 1 1/2″) or Ø35x2 (suitable for 1″), Ø28x1 (suitable for 3/4″)

MODEL

K2AD60

Specifications

Model		K2AD60
Party Line		None
Power	Voltage	110/220 Vac, 50/60 Hz
	Power Consumption	Zero signal: 8.5VA/6.4W, max signal: 40VA/32W
Speaker Amplifier	Output	Push-Pull Class B, 12W
	Gain Control	0.25Vrms, at rated output
	Frequency Response	250～4,000 Hz, +/-3dB reference to 1K Hz
	Distortion	1% Max. THD @ 1,000 Hz, 12W
	Input Impedance	50,000Ω, nominal
	Output Impedance	8/16Ω
	Output Adjustment	Speaker volume can be adjusted via front panel
Environment	IP Degree	IP66
	Certification	CNS: Ex nC IIC T6 Gc / Ex tc IIIB T85°C Db CQST: Ex ec ic IIC T6 Gc / Ex tc ib IIIC T80°C Dc
	Ambient Temperature	-20°C～+50°C
Packing	Dimensions	420(L) x 330(W) x 350(H) mm
	Weight	8.1 kg

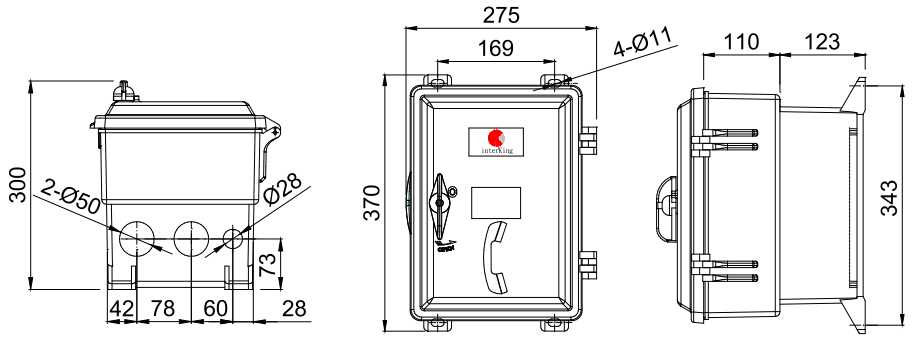

Bottom View　　Front View　　Right View

K2AD60　　Unit : mm

MODEL

K15DG0

Intelligent Explosion-proof Indoor Wall Mount Handset Station

Characteristics

K15DG0

K11DG0

- Aluminum alloy enclosure, powder coated, corrosion- resistant, impact-resistant, IP65 rated
- 20 watt amplifier
- Single or five party lines for intercommunication
- Dual color LED light for power-on and off-hook
- Overload protection with current limiting and thermal shutdown circuits
- Modular PCB
- Fuse protection for power supply and speaker amplifier
- Surge protection for power supply
- Hook with magnetic reed switch
- Dynamic microphone for noise cancelling and feedback preventing
- Available for 110Vac or 220Vac
- Adjustable speaker volume from the internal front panel
- Mute setting of speaker
- With power supply and speaker amplifier
- Address setting, automatically adjusting speaker volume by measuring ambient noise
- Two DI & DO for control
- Pre-broadcast tone and self-detection sound of speaker
- CNS certified, Ex d ib IIB+H_2 T6 Gb / Ex ib tb IIIC T85℃ Db
- CQST certified, Ex db ib IIB+H_2 T6 Gb / Ex tb ib IIIC T80℃ Db
- Cable entry - 1″ NPT x 2, 3/4″ NPT x 1
- K15DG0 - Indoor Five Party Wall Mount Handset Station
- K11DG0 - Indoor Single Party Wall Mount Handset Station

MODEL

K15DG0

Specifications

	Model	K15DG0	K11DG0
	Party Line	Five Party	Single Party
Power	Voltage	110/220 Vac, 50/60 Hz	
	Power Consumption	Zero signal: 8.5VA/6.4W, max signal: 40VA/32W	
Handset Amplifier	Output Level	1.5 Vrms nominal into 33Ω load	
	Output Limit	1.5 Vrms nominal	
	Gain Control	56 dB nominal (below limiter level); adjustable from 40 to 63 dB	
	Frequency Response	250 ～ 4,000 Hz. +/-3 dB	
	Distortion	1.5% Max. THD @ 1,000 Hz	
	Control	Microphone gain, receiver volume and side tone adjustment	
Speaker Amplifier	Output	Push-Pull Class B, 12W	
	Gain Control	0.25Vrms, at rated output	
	Frequency Response	250～4,000 Hz, +/-3dB reference to 1K Hz	
	Distortion	1% Max. THD @ 1,000 Hz, 12W	
	Input Impedance	50,000Ω, nominal	
	Output Impedance	8/16Ω	
	Output Adjustment	Speaker volume can be adjusted via internal front panel	
Handset	Material	ABS	
	Microphone	10Ω; noise-cancelling, dynamic	
	Receiver	150Ω; high-efficiency, dynamic	
	Cord	4 conductors retractile, 5-foot extended, PVC	
	Control	Page push button	
Environment	IP Degree	IP65	
	Certification	CNS: Ex d ib IIB+H_2 T6 Gb / Ex ib tb IIIC T85°C Db CQST: Ex db ib IIB+H_2 T6 Gb / Ex tb ib IIIC T80°C Db	
	Ambient Temperature	-20°C～+50°C	
Packing	Dimensions	420(L) x 330(W) x 320(H) mm	
	Weight	18.7 kg	

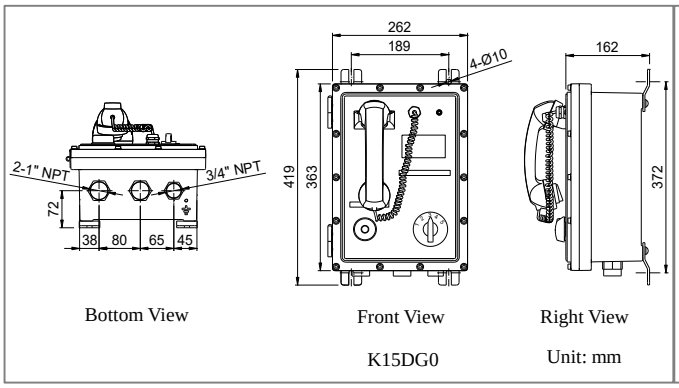

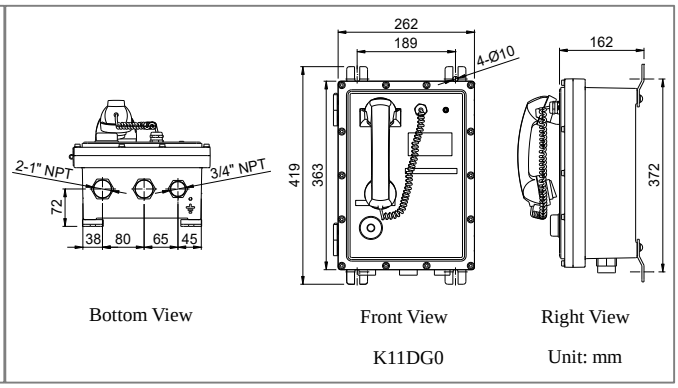

MODEL

K15D40

Intelligent Explosion-proof Outdoor Wall Mount Handset Station

Characteristics

K15D40 K11D40

- Aluminum alloy enclosure, powder coated, corrosion-resistant, impact-resistant, IP65 rated
- 20 watt amplifier
- Single or five party lines for intercommunication
- Dual color LED light for power-on and off-hook
- Overload protection with current limiting and thermal shutdown circuits
- Modular PCB
- Fuse protection for power supply and speaker amplifier
- Surge protection for power supply
- Hook with magnetic reed switch
- Dynamic microphone for noise cancelling and feedback preventing
- Available for 110Vac or 220Vac
- Adjustable speaker volume from the internal front panel
- Mute setting of speaker
- With power supply and speaker amplifier
- Address setting, automatically adjusting speaker volume by measuring ambient noise
- Two DI & DO for control
- Pre-broadcast tone and self-detection sound of speaker
- CNS certified, Ex d ib IIB+H_2 T6 Gb / Ex ib tb IIIC T85°C Db
- Cable entry - 1″ NPT x 2, 3/4″ NPT x 1
- K15D40 - Outdoor Five Party Wall Mount Handset Station
- K11D40 - Outdoor Single Party Wall Mount Handset Station

MODEL

K15D40

Specifications

	Model	K15D40	K11D40
	Party Line	Five Party	Single Party
Power	Voltage	110/220 Vac, 50/60 Hz	
	Power Consumption	Zero signal: 8.5VA/6.4W, max signal: 40VA/32W	
Handset Amplifier	Output Level	1.5 Vrms nominal into 33Ω load	
	Output Limit	1.5 Vrms nominal	
	Gain Control	56 dB nominal (below limiter level); adjustable from 40 to 63 dB	
	Frequency Response	250 ～ 4,000 Hz. +/-3 dB	
	Distortion	1.5% Max. THD @ 1,000 Hz	
	Control	Microphone gain, receiver volume and sidetone adjustment	
Speaker Amplifier	Output	Push-Pull Class B, 12W	
	Gain Control	0.25Vrms, at rated output	
	Frequency Response	250～4,000 Hz, +/-3dB reference to 1K Hz	
	Distortion	1% Max. THD @ 1,000 Hz, 12W	
	Input Impedance	50,000Ω, nominal	
	Output Impedance	8/16Ω	
	Output Adjustment	Speaker volume can be adjusted via internal front panel	
Handset	Material	ABS	
	Microphone	10Ω; noise-cancelling, dynamic	
	Receiver	150Ω; high-efficiency, dynamic	
	Cord	4 conductors retractile, 5-foot extended, PVC	
	Control	Page push button	
Environment	IP Degree	IP65	
	Certification	CNS: Ex d ib IIB+H_2 T6 Gb / Ex ib tb IIIC T85°C Db	
	Ambient Temperature	-20°C～+50°C	
Packing	Dimensions	420(L) x 330(W) x 350(H) mm	
	Weight	22.7 kg	

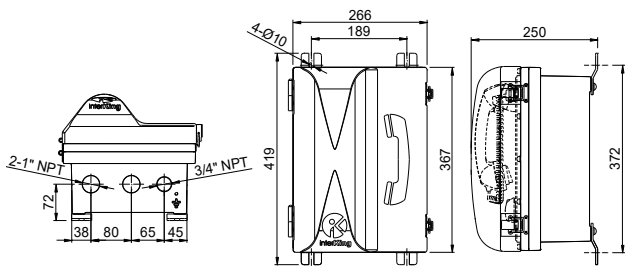

Bottom View Front View Right View

K15D40 Unit : mm

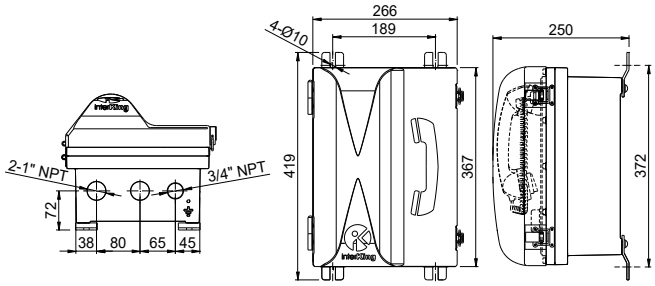

Bottom View Front View Right View

K11D40 Unit : mm

K15D40 Intelligent Explosion-proof Outdoor Wall Mount Handset Station

INTERKING ENTERPRISES LTD.
http://www.interking.com.tw

MODEL

K1ADG0

Intelligent Explosion-proof Indoor Wall Mount Amplifier Station

Characteristics

K1ADG0

- Aluminum alloy enclosure, powder coated, impact-resistant, corrosion-resistant, IP65 rated
- 20 watt amplifier
- Overload protection with current limiting and thermal shutdown circuits
- Modular PCB
- Fuse protection for power supply and speaker amplifier
- Surge protection for power supply
- Available for 110Vac or 220Vac
- Adjustable speaker volume from the internal front panel
- With power supply and speaker amplifier
- Address setting, automatically adjusting speaker volume by measuring ambient noise
- Two DI & DO for control
- CNS certified, Ex d ib IIB+H_2 T6 Gb / Ex ib tb IIIC T85°C Db
- CQST certified, Ex db ib IIB+H_2 T6 Gb / Ex tb ib IIIC T80°C Db
- Cable entry - 1″ NPT x 2, 3/4″ NPT x 1

MODEL

K1ADG0

Specifications

Model		K1ADG0
Party Line		None
Power	Voltage	110/220 Vac, 50/60 Hz
	Power Consumption	Zero signal: 8.5VA/6.4W, max signal: 40VA/32W
Speaker Amplifier	Output	Push-Pull Class B, 12W
	Gain Control	0.25Vrms, at rated output
	Frequency Response	250～4,000 Hz, +/-3dB reference to 1K Hz
	Distortion	1% Max. THD @ 1,000 Hz, 12W
	Input Impedance	50,000Ω, nominal
	Output Impedance	8/16Ω
	Output Adjustment	Speaker volume can be adjusted via internal front panel
Environment	IP Degree	IP65
	Certification	CNS: Ex d ib IIB+H_2 T6 Gb / Ex ib tb IIIC T85°C Db CQST: Ex db ib IIB+H_2 T6 Gb / Ex tb ib IIIC T80°C Db
	Ambient Temperature	-20°C～+50°C
Packing	Dimensions	420(L) x 330(W) x 320(H) mm
	Weight	15.6 kg

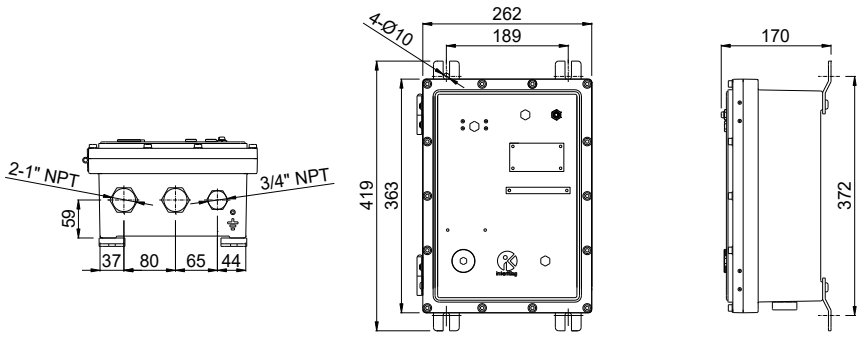

Bottom View

Front View

K1ADG0

Right View

Unit: mm

MODEL

K1AD40

Intelligent Explosion-proof Outdoor Wall Mount Amplifier Station

Characteristics

K1AD40

- Aluminum alloy enclosure, powder coated, impact-resistant, corrosion-resistant, IP65 rated
- 20 watt amplifier
- Overload protection with current limiting and thermal shutdown circuits
- Modular PCB
- Fuse protection for power supply and speaker amplifier
- Surge protection for power supply
- Available for 110Vac or 220Vac
- Adjustable speaker volume from the internal front panel
- With power supply and speaker amplifier
- Address setting, automatically adjusting speaker volume by measuring ambient noise
- Two DI & DO for control
- CNS certified, Ex d ib IIB+H_2 T6 Gb / Ex ib tb IIIC T85°C Db
- Cable entry: 1″ NPT x 2, 3/4″ NPT x 1

MODEL

K1AD40

Specifications

Model		K1AD40
Party Line		None
Power	Voltage	110/220 Vac, 50/60 Hz
	Power Consumption	Zero signal: 8.5VA/6.4W, max signal: 40VA/32W
Speaker Amplifier	Output	Push-Pull Class B, 12W
	Gain Control	0.25Vrms, at rated output
	Frequency Response	250～4,000 Hz, +/-3dB reference to 1K Hz
	Distortion	1% Max. THD @ 1,000 Hz, 12W
	Input Impedance	50,000Ω, nominal
	Output Impedance	8/16Ω
	Output Adjustment	Speaker volume can be adjusted via internal front panel
Environment	IP Degree	IP65
	Certification	CNS: Ex d ib IIB+H_2 T6 Gb / Ex ib tb IIIC T85℃ Db
	Ambient Temperature	-20℃～+50℃
Packing	Dimensions	420(L) x 330(W) x 350(H) mm
	Weight	19.7 kg

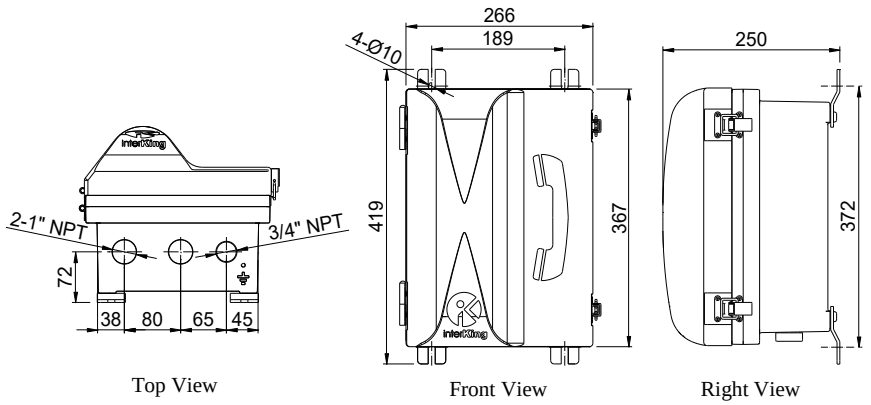

K1AD40 Unit : mm

MODEL

JB034

Weather-proof Wall Mount Junction Box

Characteristics

JB034

- SUS304 stainless steel enclosure, powder coated, corrosion-resistant, impact-resistant, IP66 rated
- Suitable for harsh industrial environments
- 1 input and 3 output terminal blocks to 70 points
- Cable entry holes: Ø50x4 (suitable for 1 1/2″) or Ø35x4 (suitable for 1″)

MODEL

JB034

Specifications

Model		JB034
Power (6 Points)	Voltage/Current/Conductor Size	300V / 30A / 22～12AWG
Signal (64 Points)	Voltage/Current/Conductor Size	300V / 15A / 22～12AWG
Environment	Ambient Temperature	-20℃～+50℃
Packing	Dimensions	360(L) x 240(W) x 180(H) mm
	Weight	3.9 kg

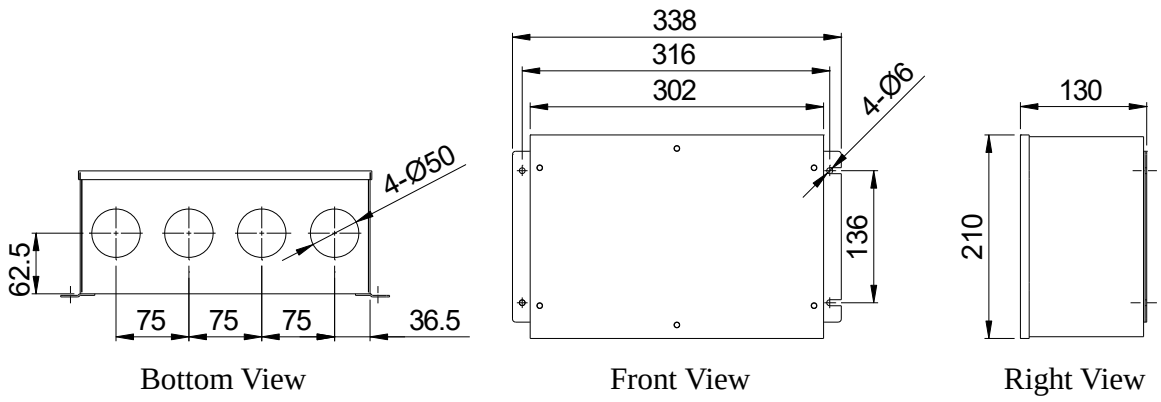

JB034

Unit: mm

MODEL

JB036

Weather-proof Wall Mount Junction Box (ABS)

Characteristics

JB036

- ABS enclosure, corrosion-resistant, impact-resistant, IP66 rated
- Suitable for harsh industrial environments
- 1 input and 3 output terminal blocks to 70 points
- Cable entry holes: Ø50 (suitable for 1 1/2″), Ø42 (suitable for 1 1/4″), Ø35 (suitable for 1″), Ø28 (suitable for 3/4″), Ø22 (suitable for 1/2″), four holes the most

MODEL

JB036

Specifications

Model		JB036
Power (6 Points)	Voltage/Current/Conductor Size	300V / 30A / 22～12AWG
Signal (64 Points)	Voltage/Current/Conductor Size	300V / 15A / 22～12AWG
Environment	IP Degree	IP66
	Ambient Temperature	-20℃～+50℃
Packing	Dimensions	400(L) x 300(W) x 180(H) mm
	Weight	2.8 kg

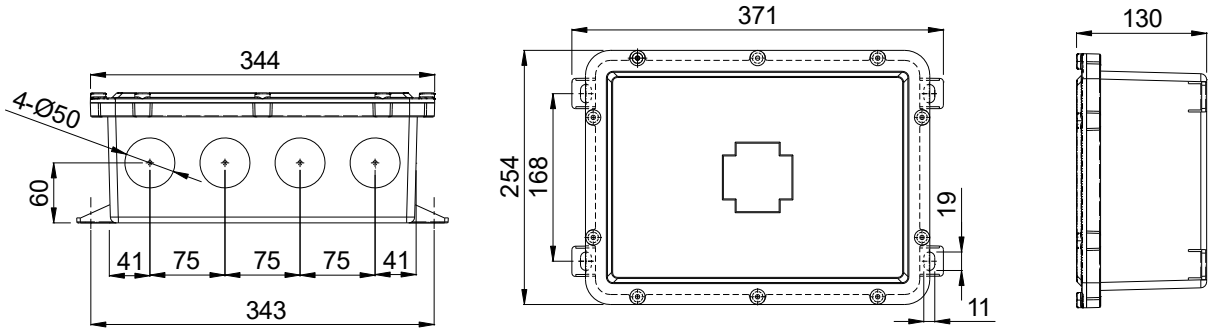

Bottom View

Front View

Right View

JB036

Unit : mm

MODEL

JB024-P

Industrial Jack Station

Characteristics

JB024-P

- Galvanized steel enclosure, powder coated, corrosion-resistant, impact-resistant
- Stainless steel anti-loose screws
- Five party lines for intercommunication
- Supply power for K35AP0 or K35DP0
- Cable entry holes - Ø50x2 (suitable for 1 1/2″) or Ø35x2 (suitable for 1″), Ø28x1 (suitable for 3/4″)
- Must be used with K35AP0 or K35DP0 for intercommunication function and portable function.

MODEL

JB024-P

Specifications

Model		JB024-P
	Party Line	Five Party
Power	Voltage	110/220 Vac, 50/60 Hz
	Power Consumption	Zero signal: 8.5VA/6.4W, max signal: 40VA/32W
Environment	Ambient Temperature	-20℃～+50℃
Packing	Dimensions	360(L) x 240(W) x 180(H) mm
	Weight	4.7 kg

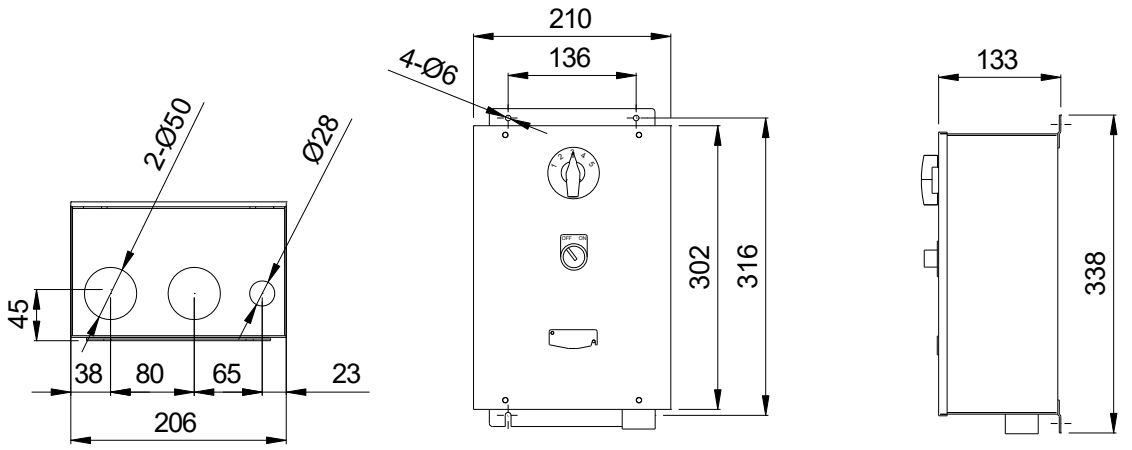

Bottom View　　Front View　　Right View

JB024-P　　Unit: mm

MODEL

JB024

Explosion-proof Wall Mount Junction Box

Characteristics

JB024

- SUS304 stainless steel enclosure, powder coated, corrosion-resistant, impact-resistant, IP66 rated
- Suitable for harsh industrial environments
- 1 input and 3 output terminal blocks to 70 points
- Suitable for Zone 2 and Zone 22 hazardous areas
- CNS certified, Ex e IIC T6 Gb / Ex tb IIIC T85°C Db
- Cable entry holes - Ø50x4 (suitable for 1 1/2″) or Ø35x4 (suitable for 1″)

MODEL

JB024

Specifications

Model		JB024
Power (6 Points)	Voltage/Current/Conductor Size	300V / 30A / 22～12AWG
Signal (64 Points)	Voltage/Current/Conductor Size	300V / 15A / 22～12AWG
Environment	IP Degree	IP66
	Certification	CNS: Ex e IIC T6 Gb / Ex tb IIIC T85°C Db
	Ambient Temperature	-20°C～+50°C
Packing	Dimensions	360(L) x 240(W) x 180(H) mm
	Weight	3.9 kg

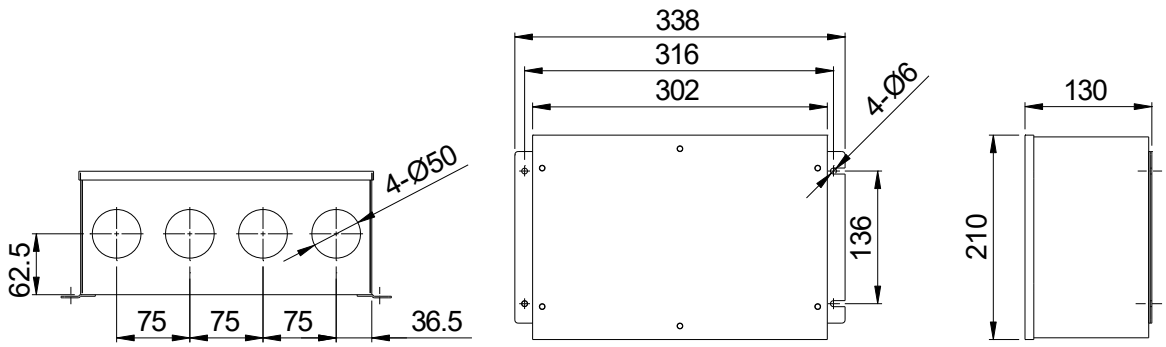

Bottom View　　Front View　　Right View

JB024　　Unit: mm

MODEL

JB026

Explosion-proof Wall Mount Junction Box (ABS)

Characteristics

JB026

- ABS enclosure, corrosion-resistant, impact-resistant, IP66 rated
- Suitable for harsh industrial environments
- 1 input and 3 output terminal blocks to 70 points
- Suitable for Zone 2 and Zone 22 hazardous areas
- CNS certified, Ex e IIC T6 Gb / Ex tb IIIC T85℃ Db
- Cable entry holes - Ø50 (suitable for 1 1/2″), Ø42 (suitable for 1 1/4″), Ø35 (suitable for 1″), Ø28 (suitable for 3/4″), Ø22 (suitable for 1/2″), four holes the most

MODEL

JB026

Specifications

Model		JB026
Power (6 Points)	Voltage/Current/Conductor Size	300V / 30A / 22～12AWG
Signal (64 Points)	Voltage/Current/Conductor Size	300V / 15A / 22～12AWG
Environment	IP Degree	IP66
	Certification	CNS: Ex e IIC T6 Gb / Ex tb IIIC T85°C Db
	Ambient Temperature	-20°C～+50°C
Packing	Dimensions	400(L) x 300(W) x 180(H) mm
	Weight	2.8 kg

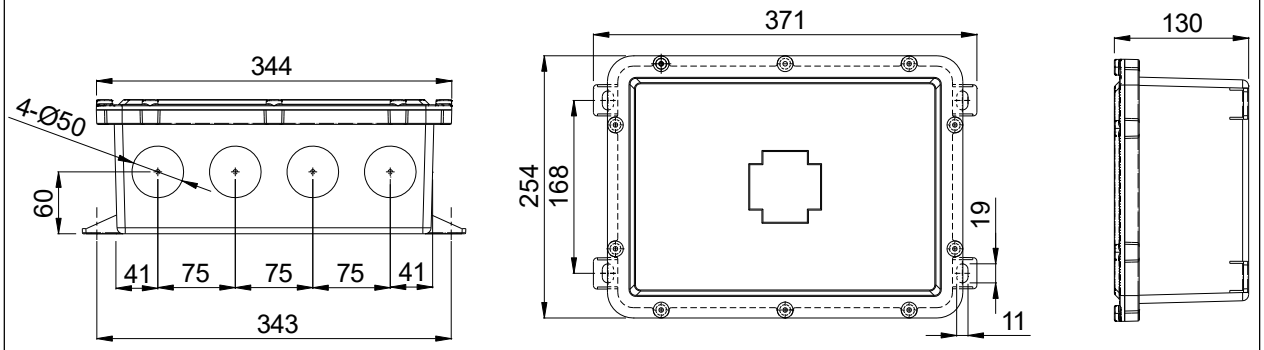

Bottom View　　Front View　　Right View

JB026　　Unit : mm

MODEL

JB014

Explosion-proof
Wall Mount Junction Box

Characteristics

JB014

- Aluminum alloy enclosure, powder coated, corrosion-resistant, impact-resistant, IP65 rated
- 1 input and 3 output terminal blocks to 64 points
- Suitable for indoor area
- Suitable for Zone1 and Zone 21 hazardous areas.
- CNS certified, Ex d IIB+H_2 T6 Gb / Ex tb IIIC T85℃ Db
- Cable entry - 1″ NPT x 4

MODEL

JB014

Specifications

Model		JB014
Power (12 Points)	Voltage/Current/Conductor Size	300V / 30A / 22～12AWG
Signal (52 Points)	Voltage/Current/Conductor Size	300V / 15A / 22～12AWG
Environment	IP Degree	IP65
	Certification	CNS: Ex d IB+H_2 T6 Gb / Ex tb IIIC T85°C Db
	Ambient Temperature	-20°C～+40°C
Packing	Dimensions	420(L) x 330(W) x 350(H) mm
	Weight	15 kg

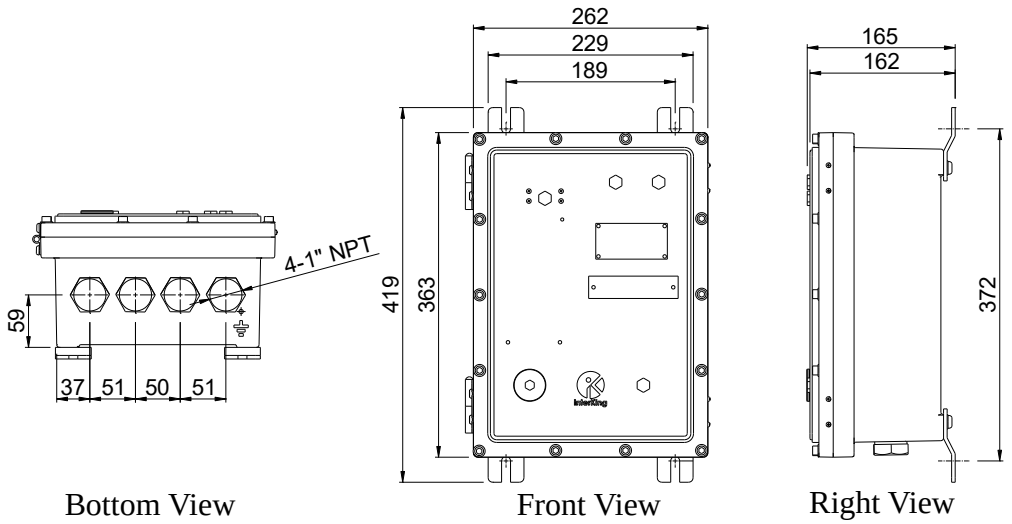

Bottom View

Front View

Right View

JB014

Unit: mm

MODEL

SB861 · SF861 · SB862 · TH30P · TS15R
TQ15R · TU-10F · TU15F · TX10F

Speaker

Characteristics

SB861	SF861	SB862
TH30P	TS15R	TQ15R
TU-10F	TU15F	TX10F

Speakers with Drivers

- All speakers have integral drivers
- Suitable for indoor or outdoor safe area
- Easily integrated with Interking Communication Systems

Indoor

- SB861 - 8" ABS Wall Mount Speaker with Volume Control
- SF861 - 8" Metal Flush Mount Speaker
- SB862 - 8" Metal Wall Mount Speaker with Volume Control

Outdoor

- TH30P - Grey Wide Angle ABS Horn Speaker
- TS15R - White Wide Angle ABS Horn Speaker
- TQ15R - 8" ABS Wall Mount Horn Speaker
- TU-10F - 10" Aluminum Alloy Horn Speaker
- TU15F - 15" Aluminum Alloy Horn Speaker
- TX10F - 10" Aluminum Alloy Double Horn Speaker

MODEL

SB861 · SF861 · SB862 · TH30P · TS15R
TQ15R · TU-10F · TU15F · TX10F

Specifications

Model		SB861	SF861	SB862
Driver (Impedance / power)		8Ω / 20W	8Ω / 20W	8Ω / 20W
Frequency Response		70～20000 Hz	200～15000 Hz	200～15000 Hz
Material	Enclosure	ABS	Metal	Metal
Packing	Dimensions	265L×265W×160(H) mm	270L×250W×135(H) mm	270L×250W×135(H) mm
	Weight	2 kg	1.2 kg	1.8 kg

Model		TH30P	TS15R	TQ15R
Driver (Impedance / power)		16Ω / 30W	8Ω / 15W	16Ω / 30W
Frequency Response		300～12000 Hz	200～5000 Hz	280～7600 Hz
Material	Enclosure	ABS	ABS	ABS
Packing	Dimensions	285(L) x 190(W) x 240(H) mm	233(L) x 163(W) x 163(H) mm	250(L) x 250(W) x 320(H) mm
	Weight	2 kg	1.5 kg	2.5 kg

Model		TU-10F	TU15F	TX10F
Driver (Impedance / power)		16Ω / 30W	16Ω / 30W	16Ω / 30W
Frequency Response		230～12000 Hz	230～12000 Hz	230～12000 Hz
Material	Enclosure	Aluminum Alloy	Aluminum Alloy	Aluminum Alloy
Packing	Dimensions	270(L) x 270(W) x 265(H) mm	460(L) x 460(W) x 400(H) mm	405(L) x 305(W) x 205(H) mm
	Weight	1.5 kg	3.7 kg	1.5 kg

Outdoor Speaker Driver/
Speaker Mounting Assembly

MODEL
DR130 · DR230 · DR260 / SMA41

Characteristics

DR130	DR230	DR260	SMA41

DR130 / DR230 / DR260 Speaker Drivers

- Suitable for hazardous area
- 30 watt, 16 ohm
- 1/2“ NPT threaded entry

Models

- DR130 - Aluminum alloy enclosure, suitable for Zone 1 and Zone 21 hazardous area
  CNS certified, Ex d IIB+H_2 T6 Gb / Ex tb IIIC T85°C Db
  CQST certified, Ex db IIC T6 Gb / Ex tb IIIC T85°C Db
  IP Degree : IP66
- DR230 – Aluminum alloy enclosure, suitable for Zone 2 and Zone 22 hazardous area
  CNS certified, Ex ec IIC T6 Gc / Ex tb IIIC T85°C Db
  IP Degree : IP66
- DR260 - ABS enclosure, suitable for Zone 2 and Zone 22 hazardous area
  CNS certified, Ex ec IIC T6 Gc / Ex tb IIIC T85°C Db
  CQST certified, Ex ec IIC T6 Gc / Ex tb IIIC T85°C Db
  IP Degree: IP66

SMA41 Speaker Mounting Assembly

- Can be rotated up, down, left or right to 360 degrees. Suitable for all types of horns.

MODEL

DR130 · DR230 · DR260 / SMA41

Specifications

Model		DR130	DR230	DR260	SMA41
Driver (Impedance / power)		16Ω / 30W	16Ω / 30W	16Ω / 30W	
Frequency Response		200~15K Hz	200~15K Hz	200~15K Hz	
SPL		110 dB	110 dB	110 dB	
Material	Enclosure	Aluminum Alloy	Aluminum Alloy	ABS	
Environment	IP Degree	IP66	IP66	IP66	
Packing	Dimensions	240(L) x 260(W) x 280(H) mm	135(L) x 130(W) x 180(H) mm	120(L) x 120(W) x 240(H) mm	205(L) x 135(W) x 95(H) mm
	Weight	5.2 kg	1.8 kg	1.2 kg	1.3 kg

MODEL

WH001 · HS015 · HS018 · HS020

Speaker Horn

Characteristics

WH001

HS015 / HS018 / HS020

WH001 Speaker Horn

- Wide angle, suitable for indoor or outdoor area
- ABS construction for corrosion-resistant and durability
- With U type mounting bracket
- 1-3/8" UNEF thread (female) provided for driver connection
- Dispersion: 120°× 60°
- Frequency Response: 150~15K Hz
- Suitable Drivers: DR230 / DR260 / DR130, 16Ω 30W

HS015/HS018/HS020 Speaker Horn

- Suitable for indoor or outdoor area
- Aluminum alloy enclosure, corrosion-resistant
- With U type mounting bracket
- 1-3/8" UNEF thread (female) provided for driver connection
- Dispersion: 60°
- Frequency Response: 210~20K Hz
- Suitable Drivers: DR230 / DR260 / DR130, 16Ω 30W

MODEL

WH001 · HS015 · HS018 · HS020

Specifications

Model		WH001	HS015	HS018	HS020
Frequency Response		150~15000 Hz	210~20000 Hz	210~20000 Hz	210~20000 Hz
Packing	Dimensions	250(L) x 425(W) x 315(H) mm	455(L) x 455(W) x 380(H) mm	495(L) x 510(W) x 400(H) mm	520(L) x 535(W) x 420(H) mm
	Weight	2.6 kg	2.9 kg	2.9 kg	3.3 kg
Drivers		DR230 / DR260 / DR130			
Mounting Accessories		SMA41			

Industrial
GRP Speaker

MODEL
TW83A / TW83A-A · TW830 · TW83T

Characteristics

TW83A / TW83A-A

TW830

TW83T

- GRP speaker, impact-resistant, corrosion-resistant
- Stainless steel mounting bracket and anti-loose cover screws
- Cable entry – 1/2″ NPT x 2

TW83A / TW83A-A: Self-amplified Speaker

- Applied in Paging Intercom System
- Built-in power amplifier
- TW83A: Available for 24 Vdc
- TW83A-A: Available for 110/220 Vac
- IP Degree: IP66

TW830: Speaker with Driver

- Applied in Paging Intercom System
- Built-in driver: 16Ω, 30W
- IP Degree: IP66

TW83T: High Voltage Speaker

- Applied in Public Address System and Emergency Communications System
- Sound Pressure Level (L): 100dB
- Voltage: 70/100 Vac
- Power: 7.5W / 15W
- IP Degree: IP66

MODEL

TW83A / TW83A-A · TW830 · TW83T

Specifications

	Model	TW83A	TW83A-A	TW830	TW83T
Power Requirements	Voltage	24 Vdc	110~220 Vac		70/100 Vac
	Power Consumption	Zero signal: 1.44W Max signal: 15W	110 V Zero signal: 6VA/3W Max signal: 35VA/19W 220V Zero signal: 11VA/3.5W Max signal: 40VA/20W		
Speaker Amplifier	Output	BTL Class AB, 15Watt/16Ω			
	Frequency Response	250 ~ 10,000 Hz, +/-1.5dB reference to 1K Hz			
	Distortion	1.0% Max. THD @ 1,000 Hz 9W			
	Input Impedance	50,000Ω, nominal			
	Output Impedance	16Ω			
	Paging Input	33Ω load			
Impedance				16Ω	
SPL		108dB			100dB
Material	Enclosure	Glass Reinforced Plastic (GRP)			
	Bracket	Stainless Steel			
	Screws	Stainless Steel, Anti-loose Design for Cover			
Environment	IP Degree	IP66			
	Ambient Temperature	-20°C ~+40°C			
Packing	Dimensions	240(L) x 245(W) x 405(H) mm			
	Weight	4.5 kg	4.7 kg	4.4 kg	5 kg

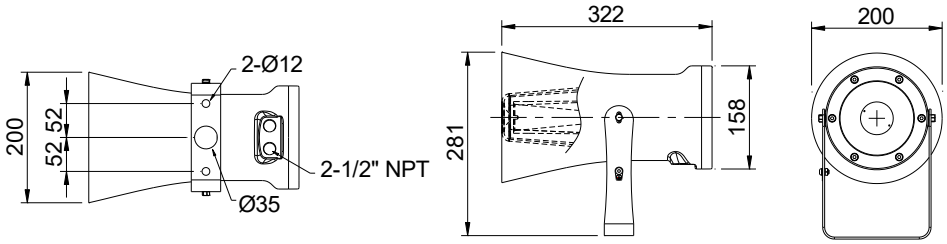

Bottom View Front View Right View

TW83A / TW83A-A / TW830 / TW83T Unit :mm

Explosion-proof
GRP Speaker

MODEL
TW81A / TW81A-A · TW810 · TW81T

Characteristics

TW81A / TW81A-A

TW810

TW81T

- GRP speaker, impact-resistant, corrosion-resistant, IP66 rated
- Stainless steel mounting bracket and anti-loose cover screws
- Cable entry – 1/2″ NPT x 2
- CNS certified, Ex d IIB+H_2 T6 Gb / Ex tb IIIC T85℃ Db
- IECEx / ATEX certified, Ex db IIC T6 or T5 Gb，Ex tb IIIC T80℃ Db

TW81A / TW81A-A: Self-amplified Speaker

- Applied in Paging Intercom System
- Built-in power amplifier
- TW81A: Available for 24 Vdc
- TW81A-A: Available for 110/220 Vac

TW810: Speaker with Driver

- Applied in Paging Intercom System
- Built-in driver: 16Ω, 30W

TW81T: High Voltage Speaker

- Applied in Public Address System and Emergency Communications System
- Sound Pressure Level (L): 100dB
- Voltage: 70/100 Vac
- Power: 7.5W / 15W
- CFS Approval No.: EP-A104005

MODEL

TW81A / TW81A-A · TW810 · TW81T

Specifications

	Model	TW81A	TW81A-A	TW810	TW81T
Power Requirements	Voltage	24 Vdc	110/220 Vac		70/100 Vac
	Power Consumption	Zero signal:1.44W Max signal:15W	110 V Zero signal:6VA/3W Max signal:35VA/19W 220V Zero signal:11VA/3.5W Max signal: 40VA/20W		
Speaker Amplifier	Output	BTL Class AB, 15Watt/16Ω			
	Frequency Response	250 ~ 10,000 Hz, +/-1.5dB reference to 1K Hz			
	Distortion	1.0% Max. THD @ 1,000 Hz 9W			
	Input Impedance	50,000Ω, nominal			
	Output Impedance	16Ω			
	Paging Input	33Ω load			
Impedance				16Ω	
SPL		108dB			100dB
Material	Enclosure	Glass Reinforced Plastic (GRP)			
	Bracket	Stainless Steel			
	Screws	Stainless Steel, Anti-loose Design for Cover			
Environment	IP Degree	IP66			
	Certification	CNS: Ex d IIB+H_2 T6 Gb / Ex tb IIIC T85°C Db IECEx / ATEX: Ex db IIC T6 or T5 Gb，Ex tb IIIC T80°C Db			
	Ambient Temperature	-20°C ≤ Ta ≤ +50°C (T6) or -20°C ≤ Ta ≤ +60°C (T5)			
Packing	Dimensions	240(L) x 245(W) x 405(H) mm			
	Weight	5 kg	5.2 kg	4.8 kg	5.4 kg

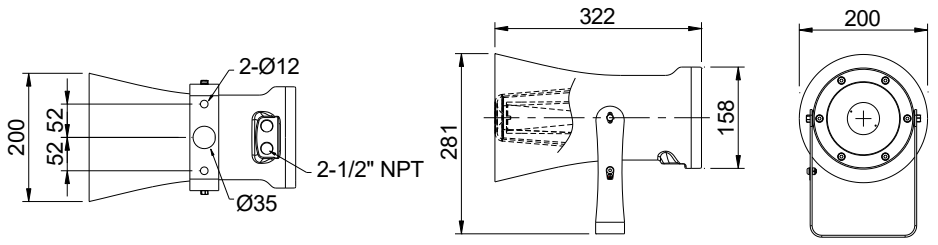

Bottom View　　Front View　　Right View

TW81A / TW81A-A / TW810 / TW81T　Unit :mm

MODEL

EN2016 · ENF03

Acoustic Booth

Characteristics

EN2016 (Assembled Type)

- Material: SUS430, T: 1.2 mm
- Color: Yellow
- Noise reducing up to 14.9 dB
- Dimensions: 925(L) x 800(W) x 600(D) mm
- Weight: 18.97 kg
- Dimensions(Shipping): 880(L) × 830(W) × 350(D) mm
- Weight(Shipping): 24 ± 0.5 kg

EN2016

ENF03

- Material: GRP, T: 3mm
- Color: Yellow
- Dimensions: 935(L) × 800(W) × 600(D) mm
- Weight: 20.9 kg
- Dimensions(Shipping): 960(L) × 980(W) × 960(D) mm
- Weight(Shipping): 27 ± 0.5 kg

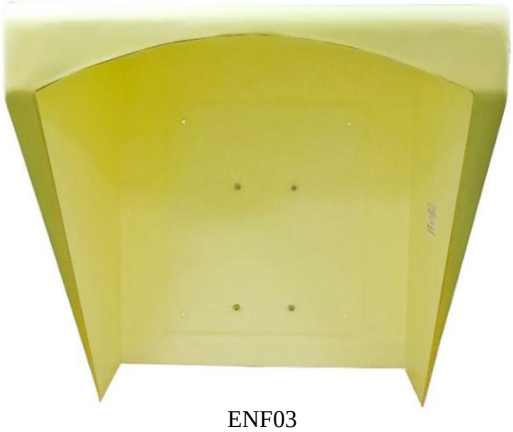

ENF03

Interface

MI007

1. Merge / Isolate Controller (MI007)

1.1 Control up to 7 merge or isolate zones.
1.2 The power supply of each circuit can be controlled separately and has the power overload protection.
1.3 Up to 1.6km transmission distance.
1.4 High quality, modular PCB.
1.5 Extended up to 14 zones.

TD007

2. T/D Control Panel (TD007)

2.1 Provide test switches for loops, control up to 7 merge or isolate zones, built-in line balance.
2.2 Every switch with Normal/Off/Test for testing.
2.3 NFB power switch and magnetic switch for 7 loops can control independently.
2.4 Up to 1.2km transmission distance.
2.5 LED indicator for merge/isolate status checking.
2.6 Overload protection.
2.7 High Quality, Modular PCB.

AD101

3. Audio Interface (AD101)

3.1 Modular PCB.
3.2 Conversion from Public Address System (100V, 70V) to Paging Intercom System (33Ω).

TI901

4. Telephone Interface (TI901)

4.1 Modular PCB.
4.2 Intercommunication between Telephone PABX (DTMF) and handset station.
4.3 Page/party time setting; it will be standby mode automatically if there is no response.
4.4 Day/night mode can be set manually or automatically.
4.5 Manual access or ringing automatically access the connection function.
4.6 Day/night setting and manually accessing control signals can connect to external wires.

TS903

5. Alarm Generator (TS903)

5.1 Modular PCB.
5.2 Alarm signals and contents can be generated according to requirements.
5.3 16 sets of alarm signals.
5.4 Pre-recorded files can be generated according to requirements and can be stored in CF card (256M).
5.5 Connected to the Paging System.
5.6 Page priority can be adjusted according to different requirements.

6. Radio Interface (RT101)

RT101

6.1 Modular PCB.

6.2 Intercommunication between handset station and radio.

6.3 Connected with UHF devices.

6.4 The brand of radio is unlimited.

6.5 Communicate with crane.

7. Signal Repeater (CR101)

CR101

7.1 Wall mount enclosure

7.2 Modular PCB.

7.3 Suitable for Interking Intercom System, supplied with 6 pairs of page party line and 1 pair of RS485 smart communication line. If the optical fiber is multi-mode, the transmitting distance can be 2km; if it's single-mode, the distance can be 25km.

7.4 CR10T : Fiber and Optic Transmitter. / CR10R : Fiber and Optic Receiver.

8. Hotline Interface Detector (HD107)

HD107

8.1 Hotline detecting (up to 7 sets of hotlines).

8.2 Modular PCB.

8.3 User only needs to switch to hotline, and picks up the handset without pressing page button; the control room will show the hotline light and make alarm sound to remind people.

8.4 Detecting adjustment according to different environment.

9. Line Balance (LB201 / LB301)

LB201 / LB301

9.1 Used for balance of circuits and lines.

9.2 Balanced value of paging is adjustable. Party line is 33Ω.

9.3 LB201:Explosion-proof type, CNS certified, Ex e IIC T6 Gb.

9.4 LB301: Industrial type.

Interface for Rack Mount Accessory

SCB019

1. Cabinet (19″) / SCB019

1.1 19″ stand-alone standard industrial cabinet.
1.2 Galvanized steel cabinet.
1.3 Standard color RAL7035.
1.4 Fluorescent lamp 110/220 Vac x 2, fan 110/220 Vac x 2.
1.5 A4 metal folder box x 1(back door).
1.6 Dimensions: 800(W) x 800(L) x 2100(H) mm (including 100mm base).

ICU101

2. Touch Screen Computer Control System(With Software) / ICU101

2.1 Industrial touch screen computer contains the system and related software (TSOFT).
2.2 19″ frame can be installed in the cabinet directly.
2.3 110/220 Vac, 50/60Hz.
2.4 Software contains control system to show the location of handset station.
2.5 "Real Time" detection for the status of handset station.
2.6 Data base to store and search for historical information; connected with DCS or other system.

AD101-R

3. Audio Interface Module / AD101-R

3.1 19″ 2U rack mount design.
3.2 Modular PCB.
3.3 Conversion from Public Address System (100V, 70V) to Paging Intercom System (33Ω).

TI901-R

4. Telephone Interface Module / TI901-R

4.1 19″ 2U rack mount design.
4.2 Modular PCB.
4.3 Intercommunication between Telephone PABX (DTMF) and handset station.
4.4 Page/party time setting; it will be standby mode automatically if there is no response.
4.5 Day/night mode can be set manually or automatically.
4.6 Manual access or ringing automatically access the connection function.
4.7 Day/night setting and manually accessing control signals can connect to external wires.

5. Alarm Interface Module / TS903-R

TS903-R

5.1 19″ 2U rack mount design.
5.2 Modular PCB
5.3 Alarm signals and contents can be generated according to requirements.
5.4 16 sets of alarm signals.
5.5 Pre-recorded files can be generated according to requirements and can be stored in CF card (256M).
5.6 Connected to the Paging System.
5.7 Page priority can be adjusted according to different requirements.

6. Radio Interface Module / RT101-R

RT101-R

6.1 19″ 2U rack mount design.
6.2 Modular PCB
6.3 Intercommunicate between handset station and walkie-talkie.
6.4 Connected with UHF devices.
6.5 The brand of radio is unlimited.
6.6 Communication with page signals.

7. Signal Repeater / CR101-R

CR101-R

7.1 19″ 4U rack mount design.
7.2 Modular PCB
7.3 Suitable for Interking Intercom System, supplied with 6 pairs of page party line and 1 pair of RS485 smart communication line. If the optical fiber is multi-mode, the transmitting distance can be 2km; if it's single-mode, the distance can be 25km.
7.4 CR10T-R: Fiber and Optic Transmitter / CR10R-R: Fiber and Optic Receiver.

MODEL

16C PVC System Cable
2C PVC Speaker Cable

SC016 · SC002

Characteristics

16C PVC System Cable

- Bare copper conductor with aluminum-mylar shield
- PVC insulation, thickness is as Chart 1.1
- Power line: black, white and green 3C twisted-pair cables, 14AWG (2mm²), lay<60mm with copper braid shield and aluminum-mylar shield
- Paging / Intercom signal line: 6 twisted-pair cables, 18AWG (0.75mm²), lay<40mm, with aluminum-mylar shield
- Spare cable: 1C, 18AWG (0.75mm²)
- Label: Manufacturer's name, Voltage, AWG
- Specification is as Chart 1.1
- Color is as Chart 1.2
- Cable consists of: 14AWG×3C (copper braid shield and aluminum-mylar)
  +18AWG×6P (aluminum-mylar tape)
  +18AWG×1C

Chart 1.1

Conductor				Insulated Thickness	Outside Jacket	Overall Diameter	Temperature
AWG	Inside Diameter mm²	Outside Diameter mm	No./mm mm	mm	mm	mm	
14AWGx3C	2	1.8	37/0.26	0.8	3.4	17.3±0.5	90°C
18AWGx6P	0.75	1.14	30/0.18	0.6	2.3		
18AWGx1C	0.75	1.14	30/0.18	0.6			

Chart 1.2

14AWG×3C (copper braid shield and aluminum-mylar)			Lay
	CODE	COLOR	
1	W	White	<60mm
2	B	Black	
3	G	Green	

18AWG×6P (aluminum-mylar tape)+18AWG×1C			
	CODE	COLOR	Lay
1	R	Red	<40mm
	BR+R	Brown Red	
2	OR	Orange	<40mm
	BR+OR	Brown Orange	
3	YE	Yellow	<40mm
	BR+YE	Brown Yellow	
4	GR	Grey	<40mm
	BR+GR	Brown Grey	
5	BL	Blue	<40mm
	BR+BL	Brown Blue	
6	PU	Purple	<40mm
	BR+PU	Brown Purple	
7	B	Black	

16C PVC

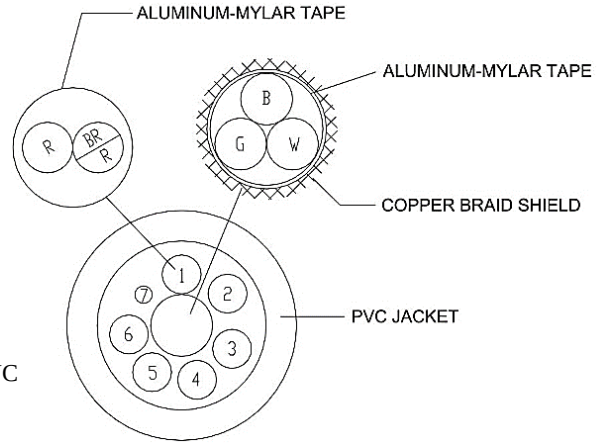

2C PVC Speaker Cable

- SC002 is suitable for Interking Paging System which includes a pair of 18AWG signal line is used for electrical connection between handset station and horn.

2C PVC

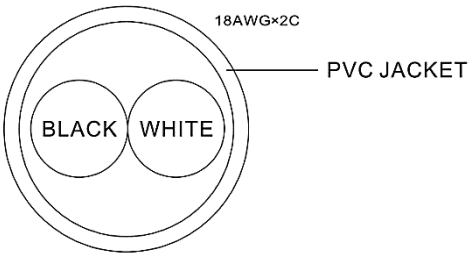

MODEL

SC019

19C PVC System Cable

Characteristics

19C PVC System Cable

- Bare copper conductor with aluminum-mylar shield
- PVC insulation, thickness is as Chart 1.1
- Power line: black, white and green 3C twisted-pair cables, 14AWG (2mm²), lay<60mm with copper braid shield and aluminum-mylar shield
- Paging / Intercom signal line: 7 twisted -pair cables, 18AWG(0.75mm²), lay<40mm with aluminum-mylar shield
- Signal Line: 1 twisted-pair cable, 18AWG(0.75mm²), lay<40mm with copper braid shield and aluminum-mylar shield
- Label: Manufacturer's name, Voltage, AWG
- Specification is as Chart 1.1
- Color is as Chart 1.2
- Cable consists of: 14AWGx3C (copper braid shield and aluminum-mylar)
  +18AWGx7P (aluminum-mylar tape)
  +18AWGx1P (copper braid shield and aluminum-mylar)

Chart 1.1

Conductor				Insulated Thickness	Outside Jacket	Overall Diameter	Temperature
AWG	Inside Diameter mm²	Outside Diameter mm	No./mm mm	mm	mm	mm	
14AWGx3C	2	1.8	37/0.26	0.8	3.4	19.8±0.5	90°C
18AWGx7P	0.75	1.14	30/0.18	0.6	2.3		
18AWGx1P	0.75	1.14	30/0.18	0.6	2.3		

19C PVC

Chart 1.2

14AWGx3C (copper braid shield and aluminum-mylar)			Lay
	CODE	COLOR	<60mm
1	W	White	
2	B	Black	
3	G	Green	

18AWGx7P (aluminum-mylar tape)+ 18AWGx1P (copper braid shield and aluminum-mylar)			
	CODE	COLOR	Lay
1	R	Red	<40mm
	BR+R	Brown Red	
2	OR	Orange	<40mm
	BR+OR	Brown Orange	
3	YE	Yellow	<40mm
	BR+YE	Brown Yellow	
4	GR	Grey	<40mm
	BR+GR	Brown Grey	
5	BL	Blue	<40mm
	BR+BL	Brown Blue	
6	PU	Purple	<40mm
	BR+PU	Brown Purple	
7	B	Black	<40mm
	BR+B	Brown Black	
8	PI	Pink	<40mm
	BR+PI	Brown Pink	

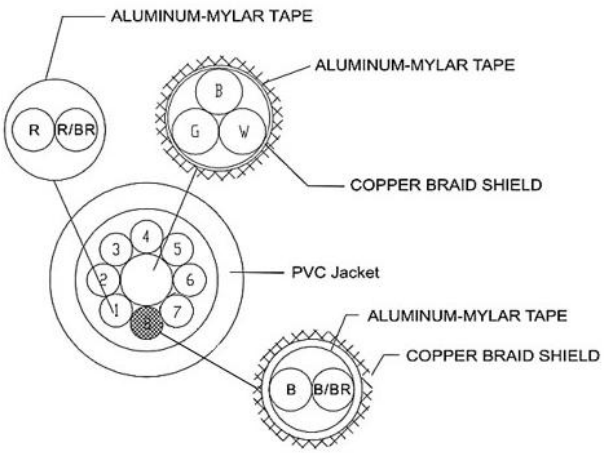

Standard Product List

Handset Station

Area	Model	Indoor	Indoor	Outdoor	Outdoor	Amplifier	Single Party	5 Party	Installation					Merge / Isolate	Memo
		IP54	IP65	IP65	IP66				Wall Mount	Desktop	Flush Mount	Side Mount	Portable		
Industrial	K35AG0	✓						✓	✓						
	K35A40				✓			✓	✓						
	K35A60				✓			✓	✓						ABS
	K31AG0	✓					✓		✓						
	K31A40				✓		✓		✓						
	K31A60				✓		✓		✓						ABS
	K35AD0	✓						✓		✓					
	K31AD0	✓					✓			✓					
	K35ADM	✓						✓		✓				✓	
	K35AF0	✓						✓			✓				
	K35AS0	✓						✓				✓			
	K3AAG0	✓				✓			✓						
	K3AA40				✓	✓			✓						
	K3AA60				✓	✓			✓						ABS
Explosion -proof (Zone 2)	K25AG0	✓						✓	✓						
	K25A40				✓			✓	✓						
	K25A60				✓			✓	✓						ABS
	K21AG0	✓					✓		✓						
	K21A40				✓		✓		✓						
	K21A60				✓		✓		✓						ABS
	K25AD0	✓						✓		✓					
	K21AD0	✓					✓			✓					
	K2AAG0	✓				✓			✓						
	K2AA40				✓	✓			✓						
	K2AA60				✓	✓			✓						ABS
Explosion -proof (Zone 1)	K15AG0		✓					✓	✓						
	K15A40			✓				✓	✓						
	K11AG0		✓				✓		✓						
	K11A40			✓			✓		✓						
	K1AAG0		✓			✓			✓						
	K1AA40			✓		✓			✓						

Intelligent Product List

Handset Station

Area	Model	Indoor	Indoor	Outdoor	Outdoor	Amplifier	Single Party	5 Party	Installation					Merge / Isolate	Memo
		IP54	IP65	IP65	IP66				Wall Mount	Desktop	Flush Mount	Side Mount	Portable		
Industrial	K35DG0	✓						✓	✓						
	K35D40				✓			✓	✓						
	K35D60				✓			✓	✓						ABS
	K31DG0	✓					✓		✓						
	K31D40				✓		✓		✓						
	K31D60				✓		✓		✓						ABS
	K35DD0	✓						✓		✓					
	K31DD0	✓					✓			✓					
	K35DDM	✓						✓		✓				✓	
	K35DF0	✓						✓			✓				
	K35DS0	✓						✓				✓			
	K3ADG0	✓				✓			✓						
	K3AD40				✓	✓			✓						
	K3AD60				✓	✓			✓						ABS
Explosion -proof (Zone 2)	K25DG0	✓						✓	✓						
	K25D40				✓			✓	✓						
	K25D60				✓			✓	✓						ABS
	K21DG0	✓					✓		✓						
	K21D40				✓		✓		✓						
	K21D60				✓		✓		✓						ABS
	K25DD0	✓						✓		✓					
	K21DD0	✓					✓			✓					
	K2ADG0	✓				✓			✓						
	K2AD40				✓	✓			✓						
	K2AD60				✓	✓			✓						ABS
Explosion -proof (Zone 1)	K15DG0		✓					✓	✓						ABS
	K15D40			✓				✓	✓						
	K11DG0		✓				✓		✓						
	K11D40			✓			✓		✓						
	K1ADG0		✓			✓			✓						
	K1AD40			✓		✓			✓						

INTERKING ENTERPRISES LTD.

Production base
No.50, Minquan St., Daliao Dist., Kaohsiung City 831115, Taiwan
TEL: +886-7-7337500
FAX: +886-7-7337506

E-mail: sales@interking.com.tw
Website: http://www.interking.com.tw

interKing and Interking logo are registered trademarks of Interking Enterprises Ltd.
All rights reserved.
Printed 01/2026 V1.1